I³N Innovative Integrated Instrumentation for Nanoscience

polifab POLITECNICO DI MILANO

POLITECNICO MILANO 1863

High Resolution Electronic Measurements in Nano-Bio Science

Instrumentation-on-chip

The power of Silicon

Giorgio Ferrari

Milano, June 2023

OUTLOOK of the LESSON

- Low-level current measurements using CMOS amplifiers
- On-chip LIAs
- Examples of sensor-electronics codesign

Integrated instruments

Keithley

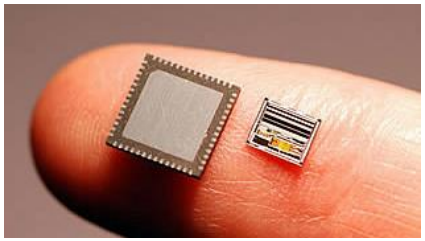

Intan, RHA2000

CMOS integration is difficult:

- Long development time (≈ 1 year)
- High cost of a prototype (≈10s-100sk€)
  (but low cost for large numbers)
- High flicker (1/f) noise!
- No large RC for noise filtering!

An expert analog IC designer is required!

So, why make integrated instruments?

Application Specific Integrated Circuit (ASIC)

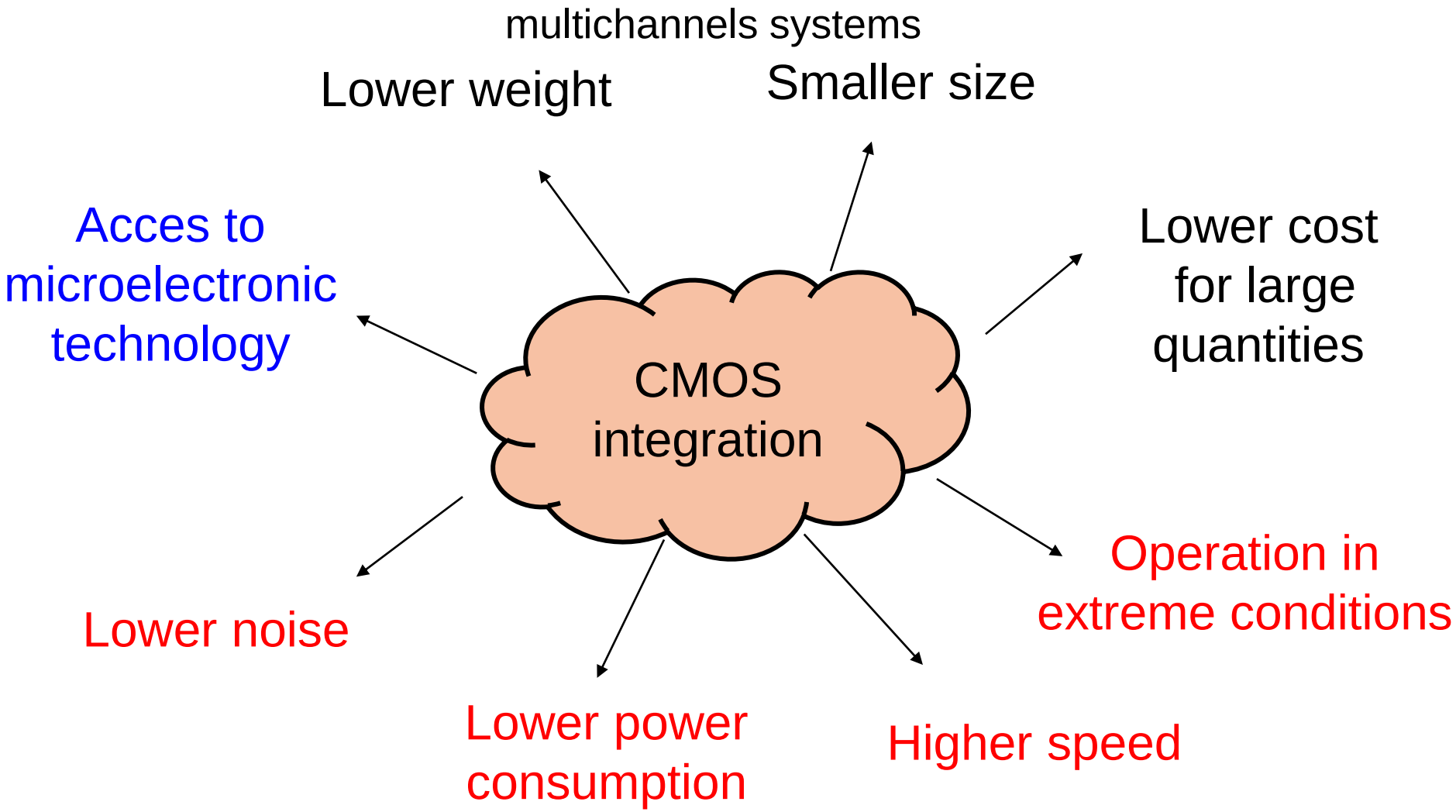

Tailoring of the electronics for a specific application

Improving the Signal-to-Noise ratio

Current sensing

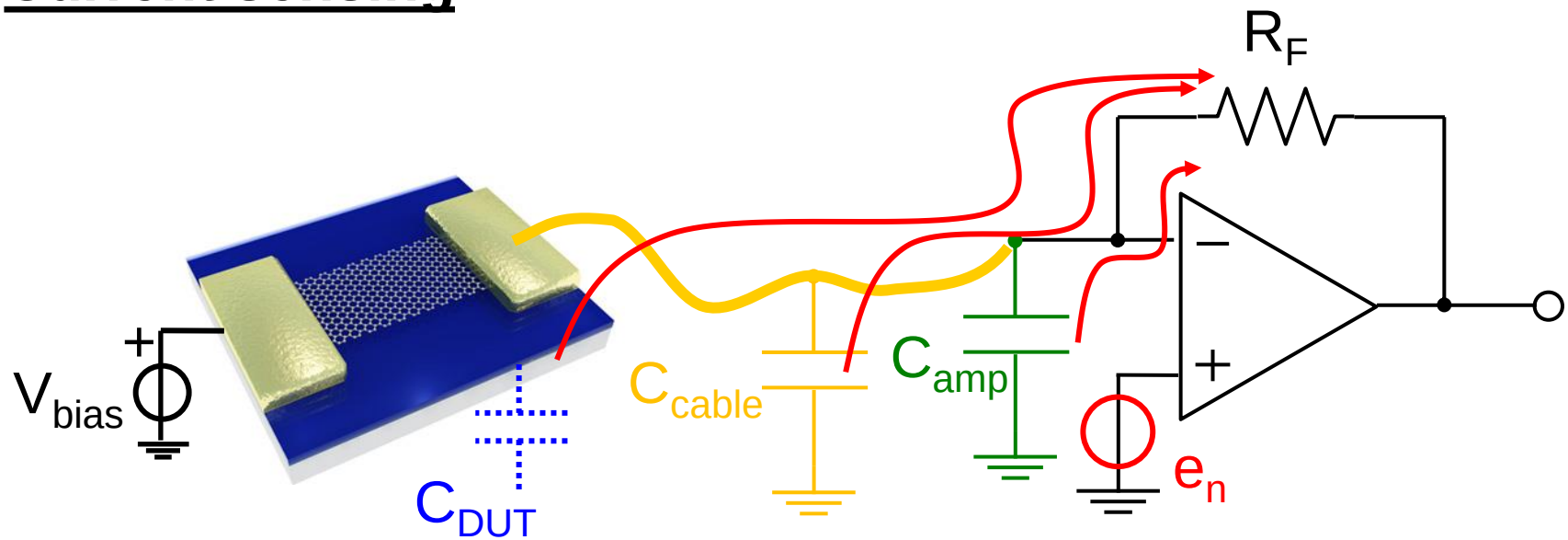

$$\overline{i_{eq}^2} \approx \frac{4kT}{R_F} + \overline{e_n^2}\,\omega^2\left(C_{DUT} + C_{cable} + C_{amp}\right)^2$$

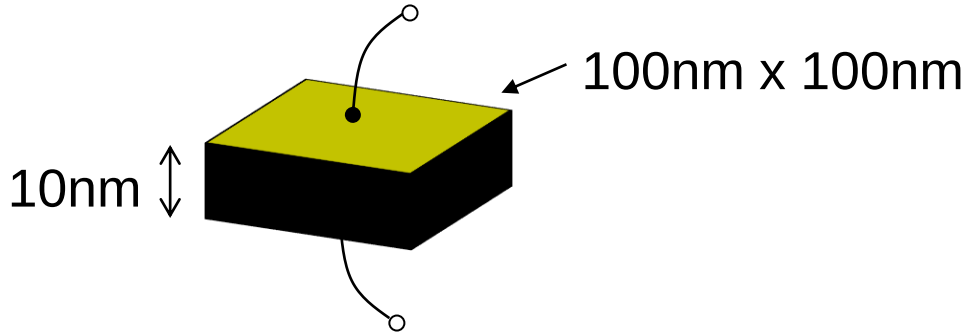

$C_{DUT} \ll 1$ pF

$C_{cable} \approx 80$ pF/m

$C_{amp} \approx 10$pF discrete comp. amp.

Improving the Signal-to-Noise ratio

Current sensing

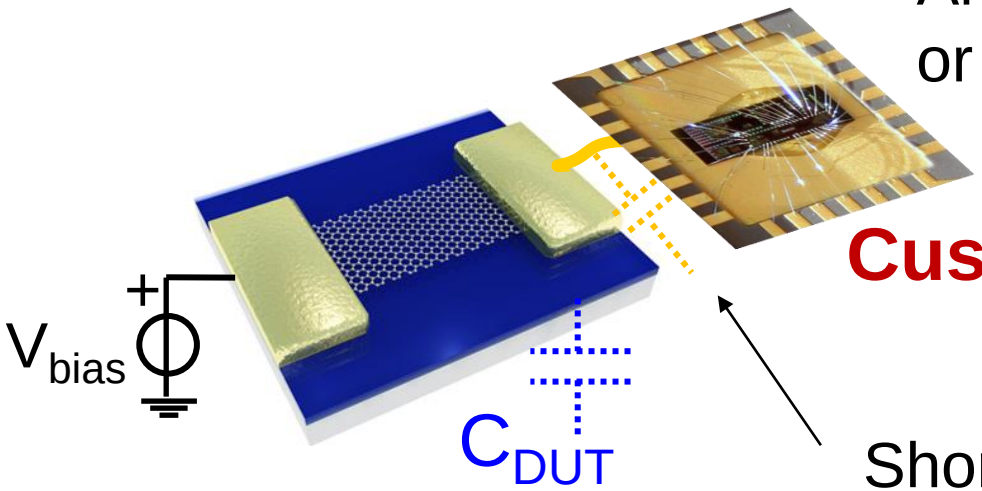

Amplified signal
or Digital output

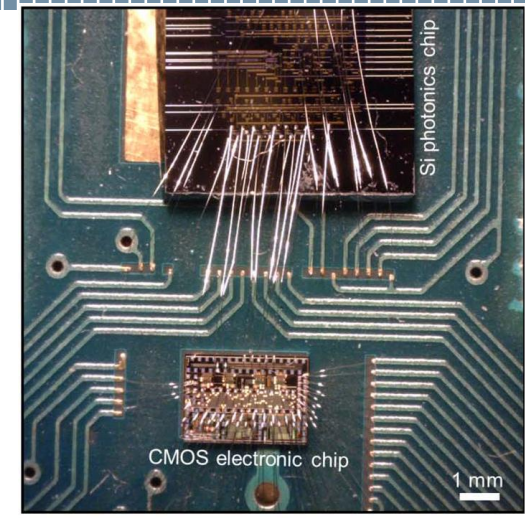

Custom CMOS circuit

Short connection, ideally
without connector

$$\overline{i_{eq}^2} \approx \frac{4kT}{R_F} + \overline{e_n^2}\,\omega^2\left(C_{DUT} + C_{cable} + C_{amp}\right)^2$$

<1pF

CMOS transimpedance amplifier

Integrated resistors value < ≈1MΩ !

(BW≈ 10kHz, noise ≈ 13pA)

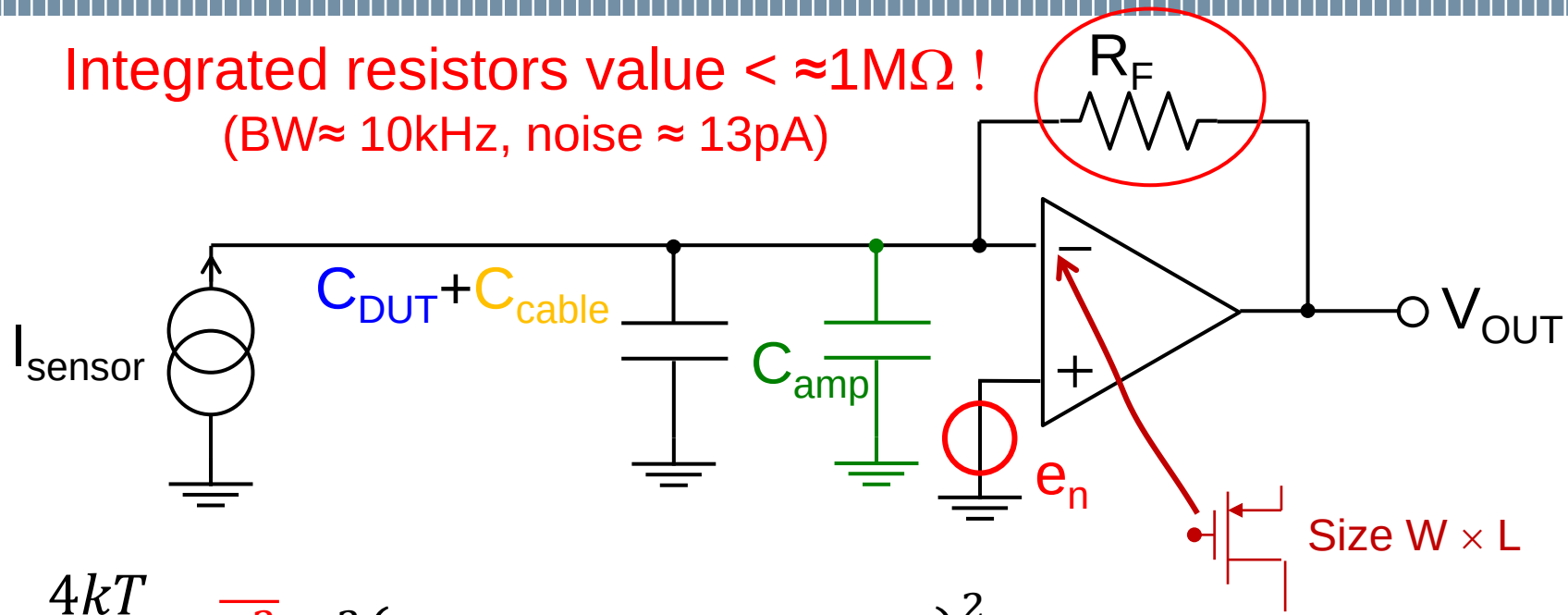

$$\overline{i_{eq}^2} \approx \frac{4kT}{R_F} + \overline{e_n^2}\,\omega^2\left(C_{DUT} + C_{cable} + C_{amp}\right)^2$$

<u>Tailoring of transistor size:</u>

$$\overline{e_n^2} = \frac{4kT}{\mu}\frac{\gamma L^2}{C_{amp}(V_G - V_T)}$$

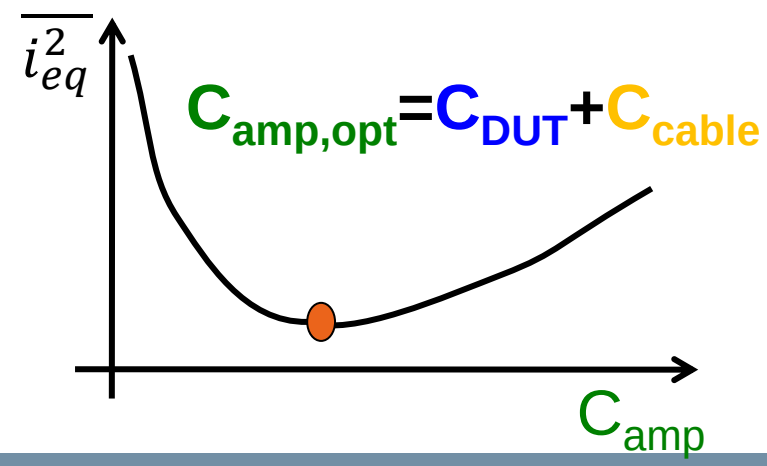

Integrator-differentiator scheme

See Sampietro's lesson

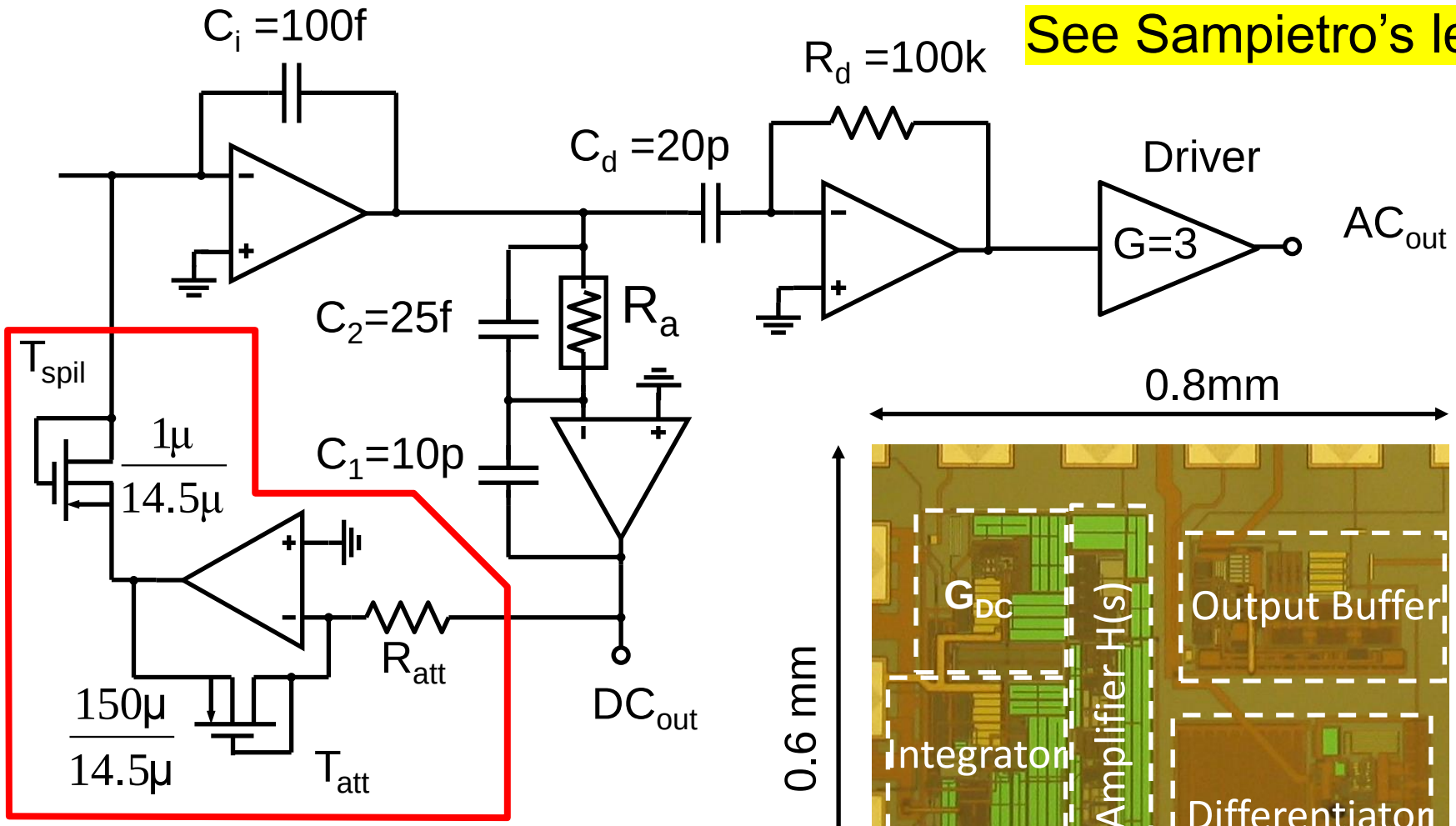

- 0.35µm CMOS process
- Bandwidth: 80Hz – 5MHz
- 3 $fA/\sqrt{Hz}$

G. Ferrari, F. Gozzini, A. Molari, M. Sampietro, JSSC **44** (2009) 16

DC-1MHz Current Amplifier

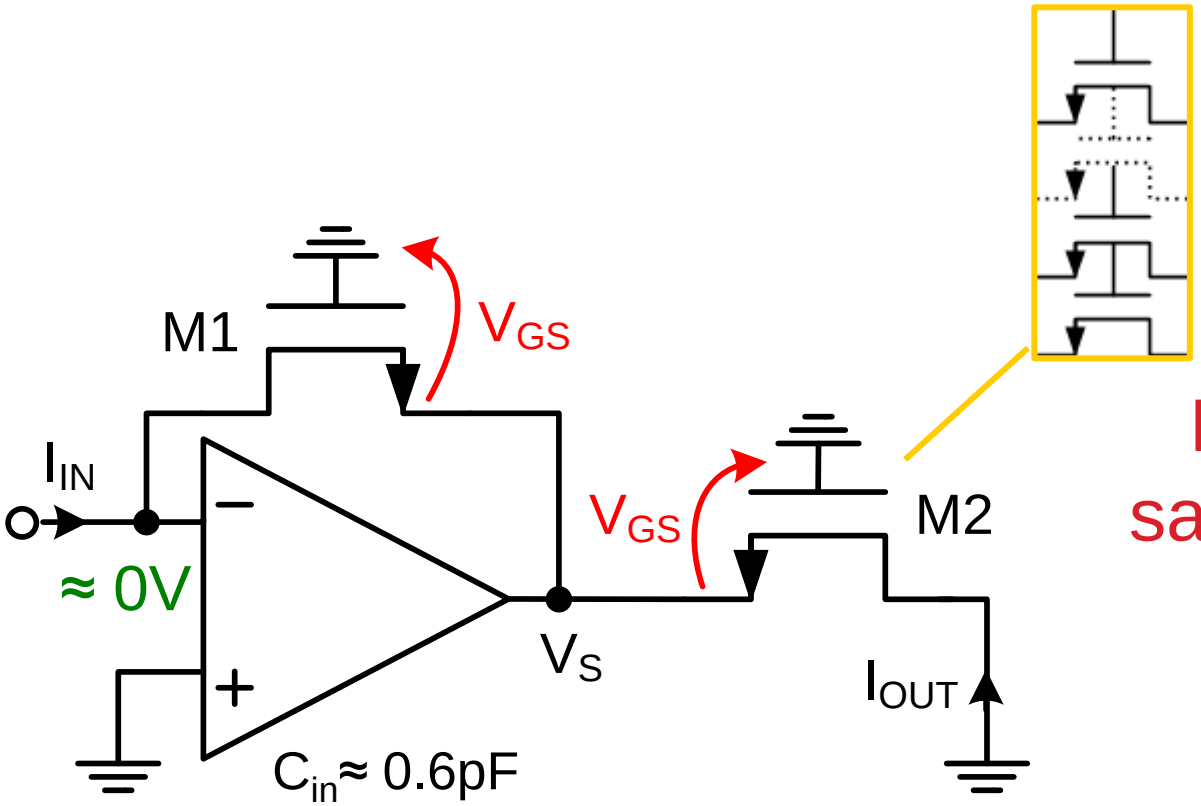

N replicas of M1
same bias condition

$I_{out} = N \times I_{in}$

Current amplification by matched MOSFETs

G. Ferrari, et al., *Electron. Lett.* **45** (2009) 1278-1280

Feedback stability and bidirectionality

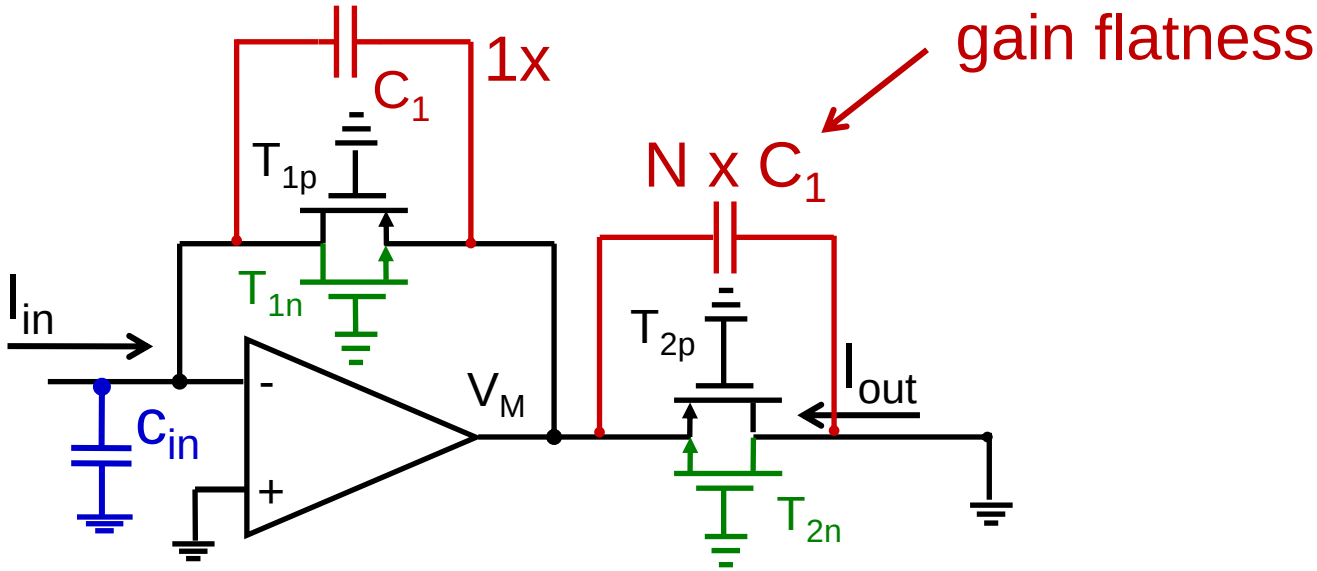

$I_{in}>0$ → n-MOS
$I_{in}<0$ → p-MOS

nMOS-pMOS matching better than 1%
(non-minimal transistor size)

$$loop\ gain \approx A_{OP}(s)\frac{g_m}{sC_{in}}$$

C_1 for feedback stability

$$loop\ gain \approx A_{OP}(s)\frac{C_1}{C_{in}+C_1}$$

CMOS implementation

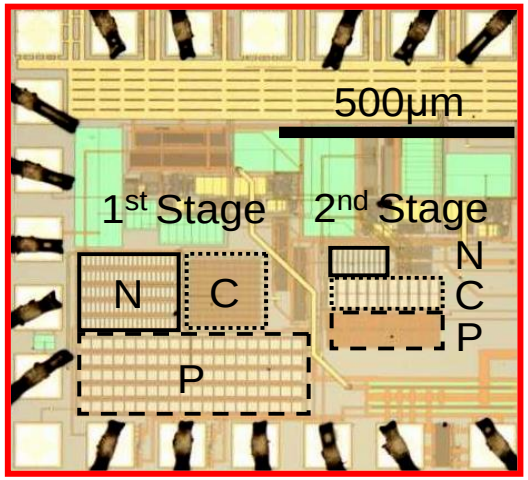

AMS 0.35µm, Area = 0.48mm²

Two stages:

99x10 = 990 total gain

V_{supply} = ±1.5V I_{bias} = 20mA

→ battery

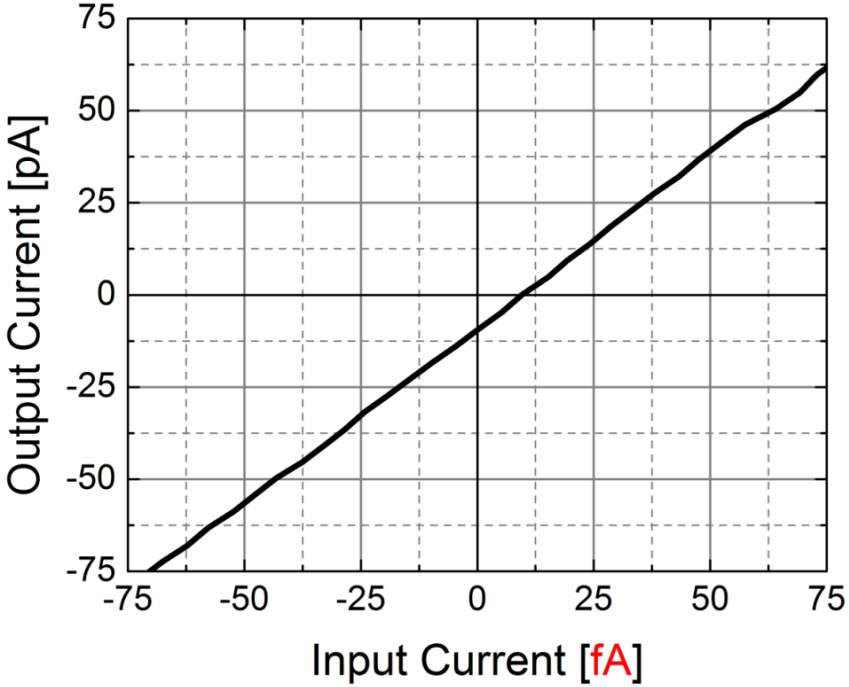

- Linearity error < 1%
- Current offset of 12fA
- femtoAmpere capability
- Bandwidth: DC – 1MHz

G. Ferrari, et al., *Electron. Lett.* **45** (2009) 1278-1280

Noise Spectra

$$\overline{i_{TOT}^2} \cong \frac{4kT}{R_F G^2} + 2qI_{IN} + \overline{e_n^2} \cdot (2\pi f)^2 \cdot (C_{IN} + C_1)^2$$

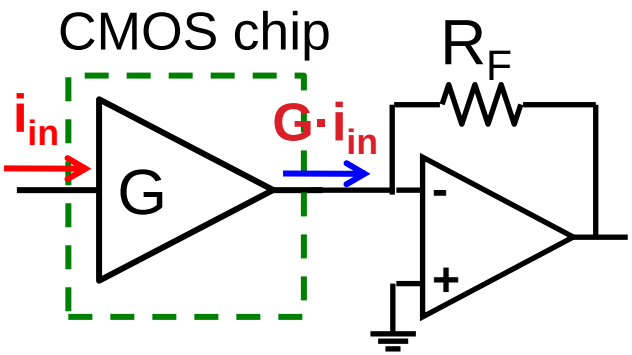

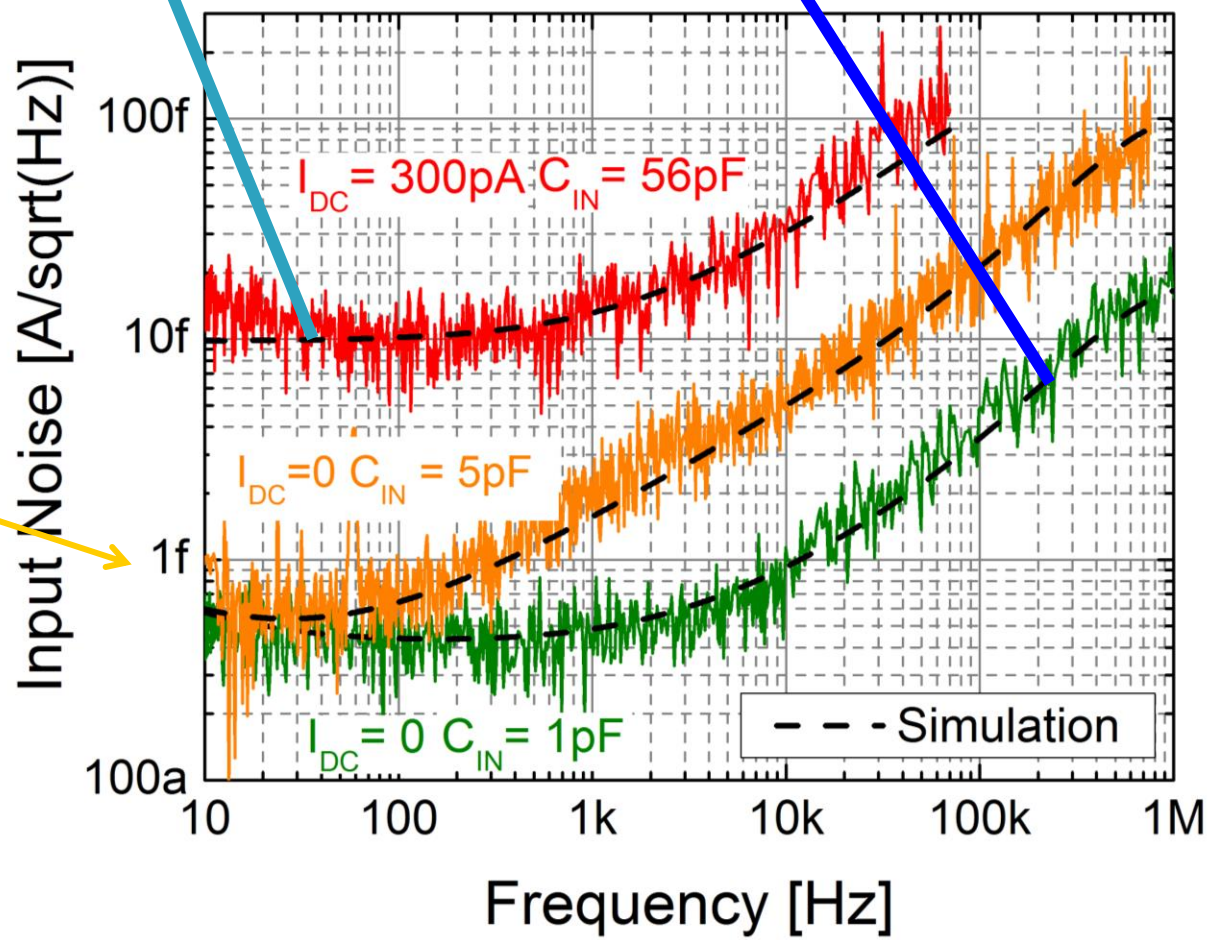

Equivalent to a **100GΩ** resistor!

Limited by the external transimpedance (100kΩ)

Low-Noise Current Tracking

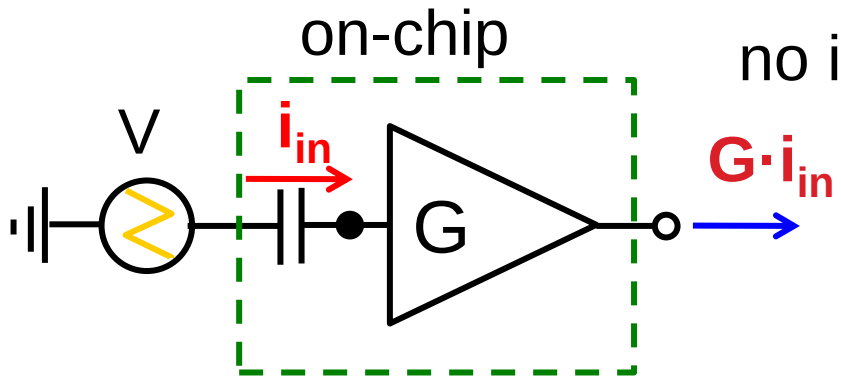

no input cable

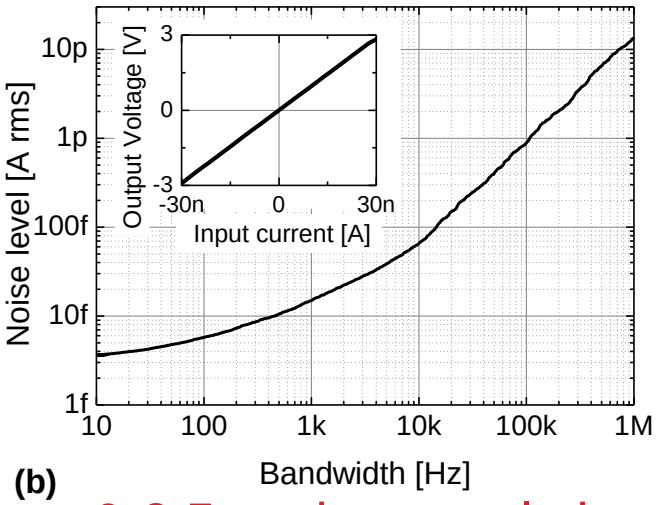

(b)

1pA rms & 5μs time resolution
(60 electrons)

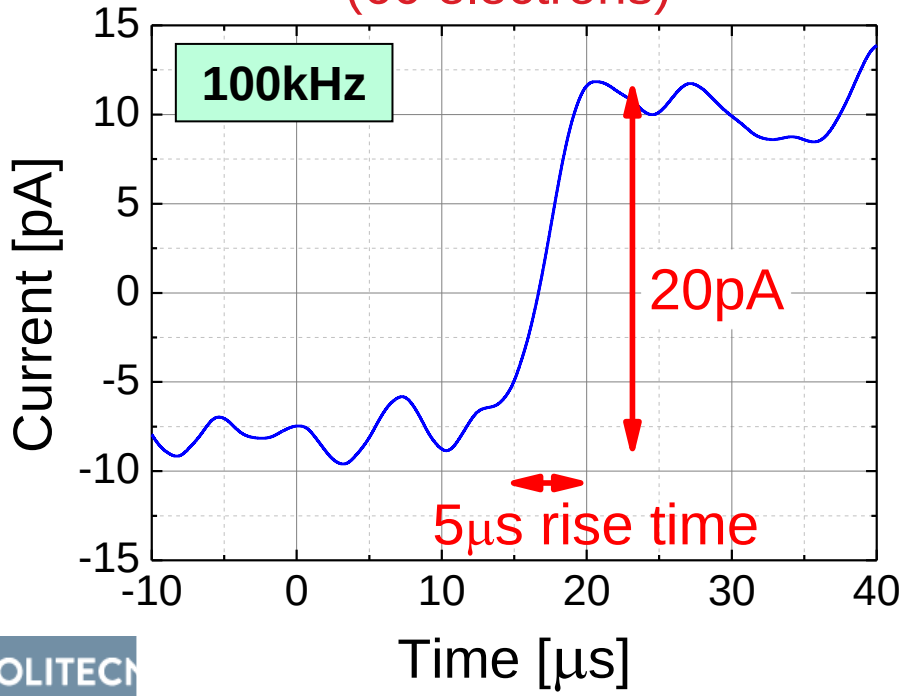

15fA rms & 0.5ms time resolution

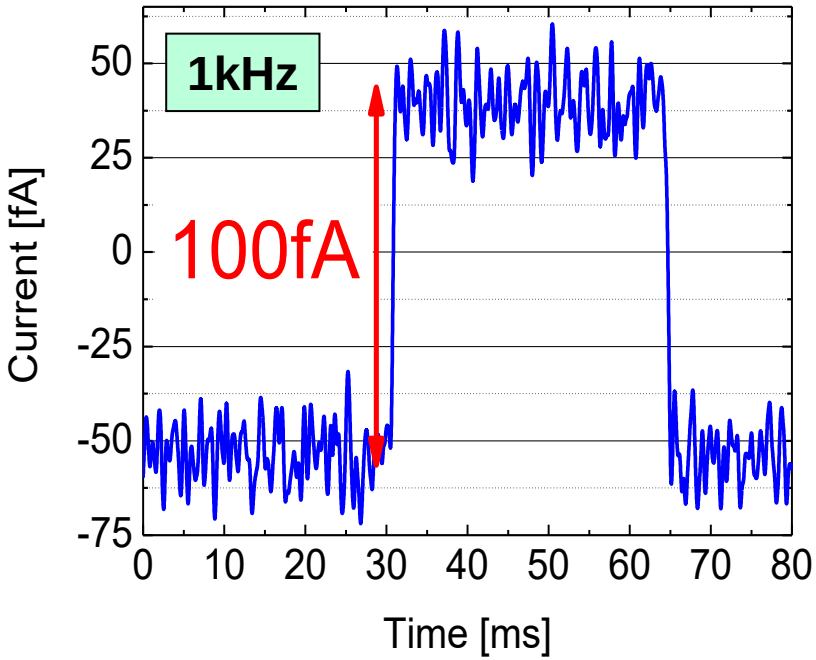

The chip as high sensitivity add-on

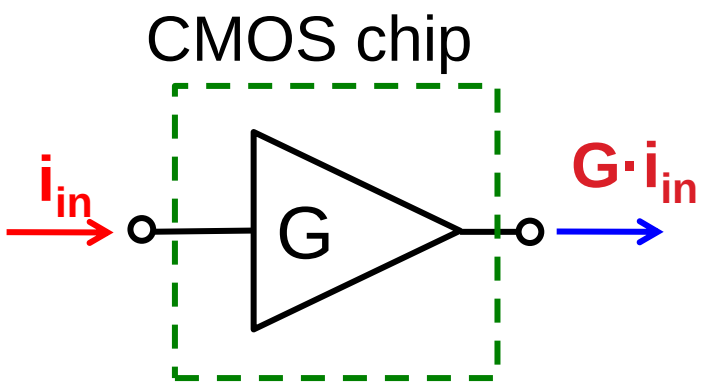

Current-mode output

↓

easy coupling to bench-top instruments

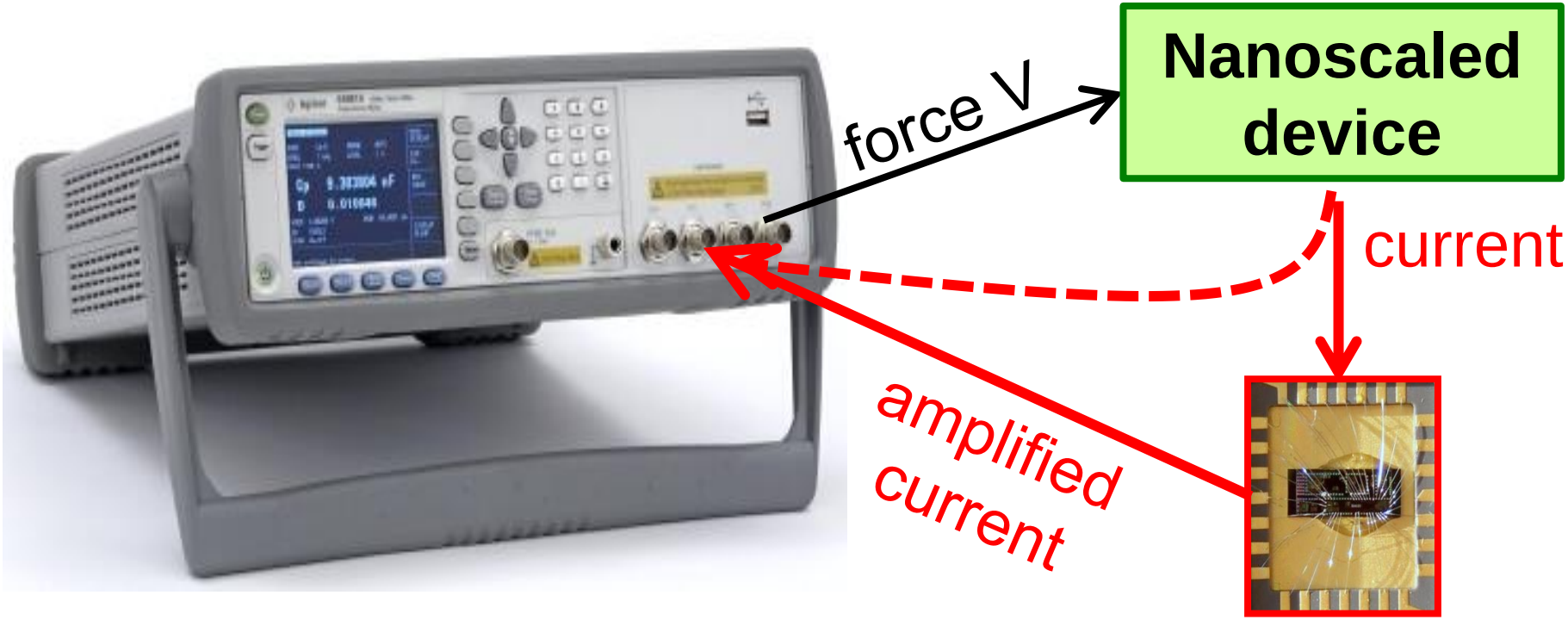

The chip as high sensitivity add-on

Spectrum of a 0.5pF capacitor without and with the preamplifier.
V_{AC}=3mV, T_m = 0.4s, Agilent precision LCR meter (E4980a)

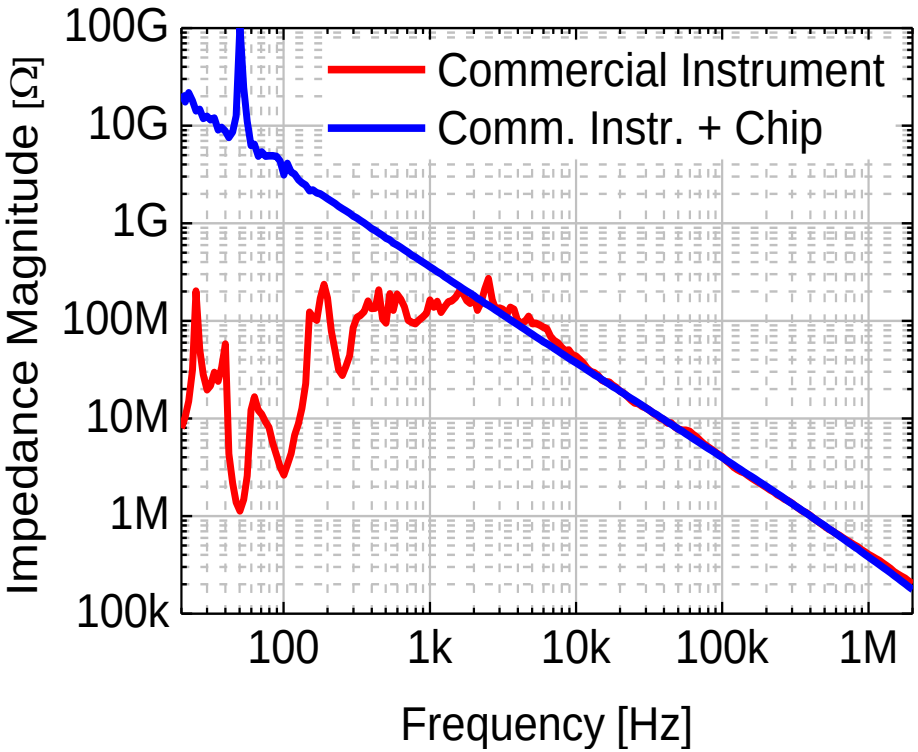

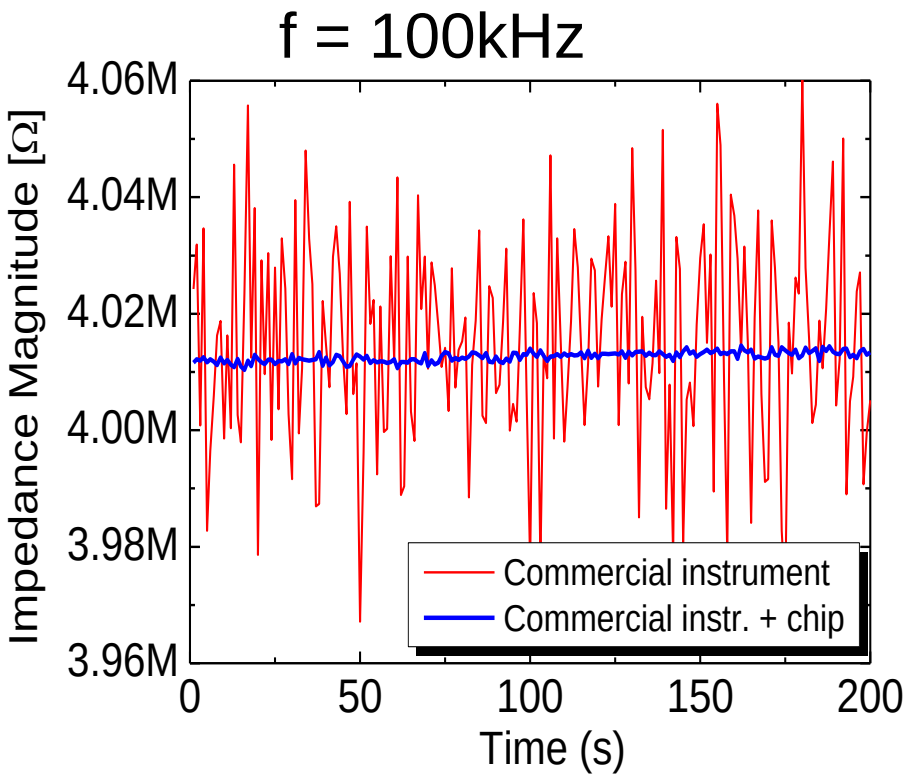

Maximum impedance increased
by two orders of magnitude!

The LOCK-IN idea

Lesson of Sampietro

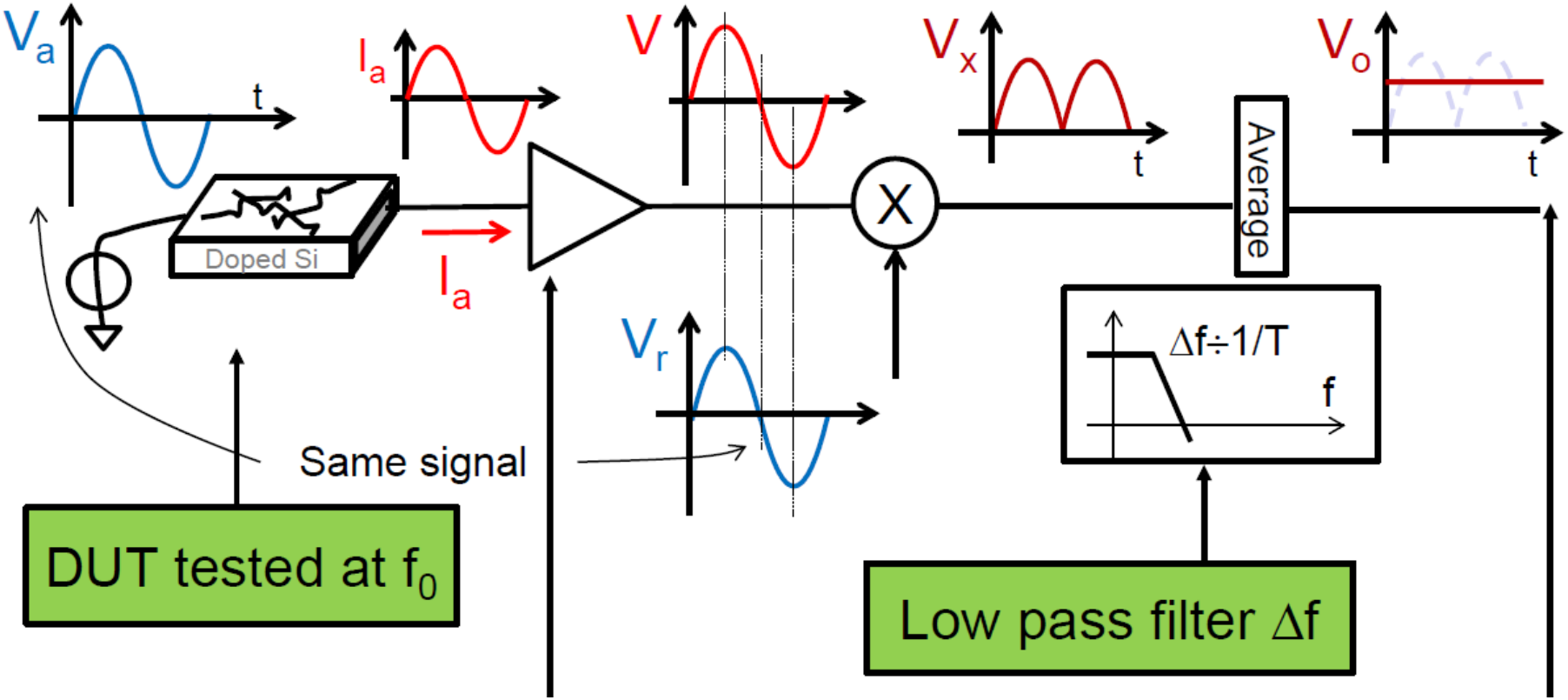

Is it possible to integrate a lock-in amplifier into a single chip?

Credited to Robert Dicke, founder of Princeton Applied Research (PAR) in the 1960's.

Multiplier

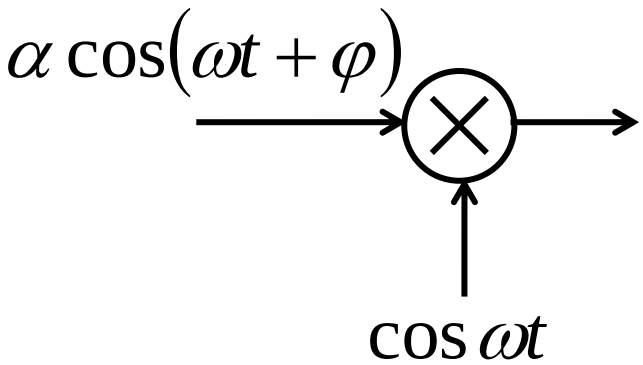

$$\frac{1}{2}\alpha\cos\varphi+\frac{1}{2}\alpha\cos(2\omega t+\varphi)$$

Analog active multiplier

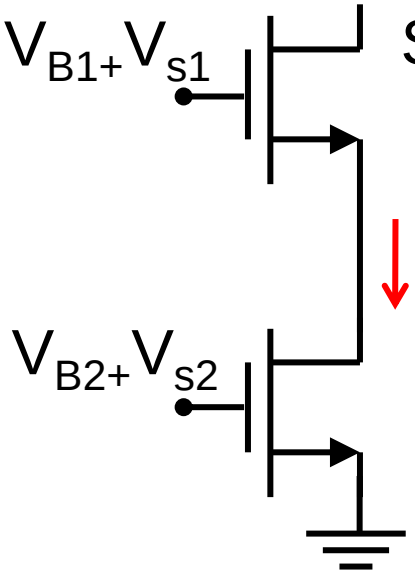

Saturation (follower)

$I_d=2\cdot k\cdot V_{s1}\cdot V_{s2}+\ldots$

Ohmic regime:

$I_d=k(2\cdot(V_{GS}-V_T)\cdot V_{DS}-V_{DS}^2)$

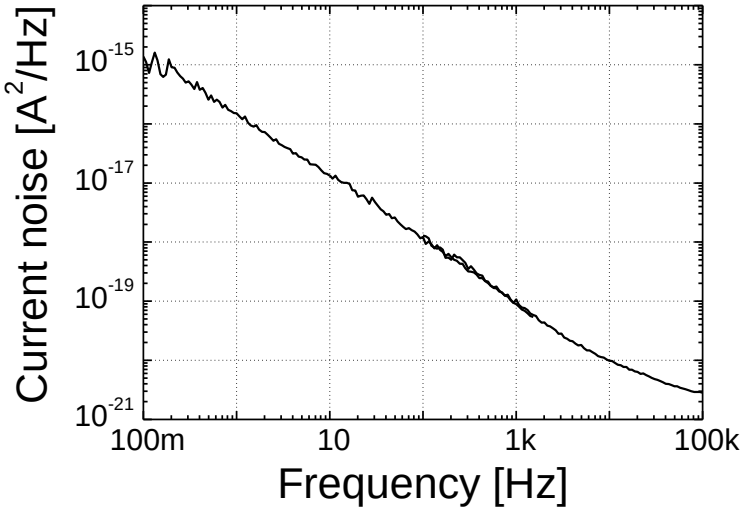

- High 1/f noise of CMOS
- Operate with small signals

"Small" SNR

Multiplier

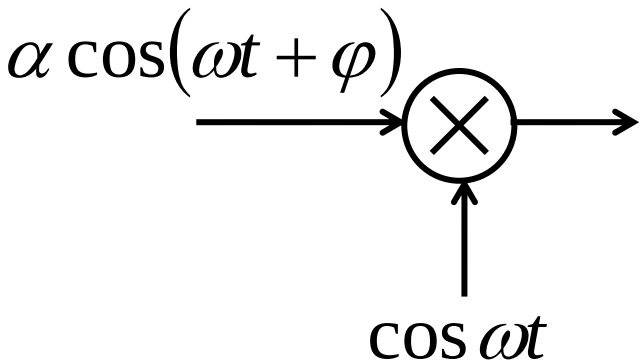

$$\frac{1}{2}\alpha\cos\varphi+\frac{1}{2}\alpha\cos(2\omega t+\varphi)$$

Analog active multiplier

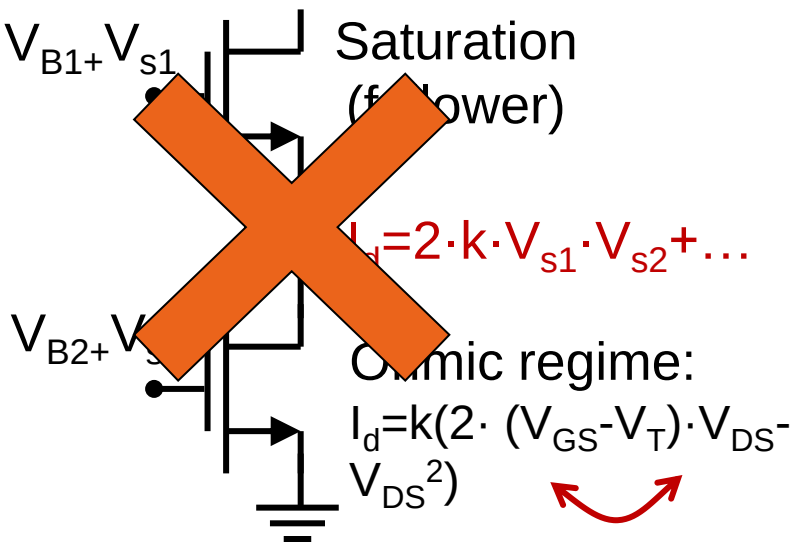

Avoid if possible

Digital multiplier

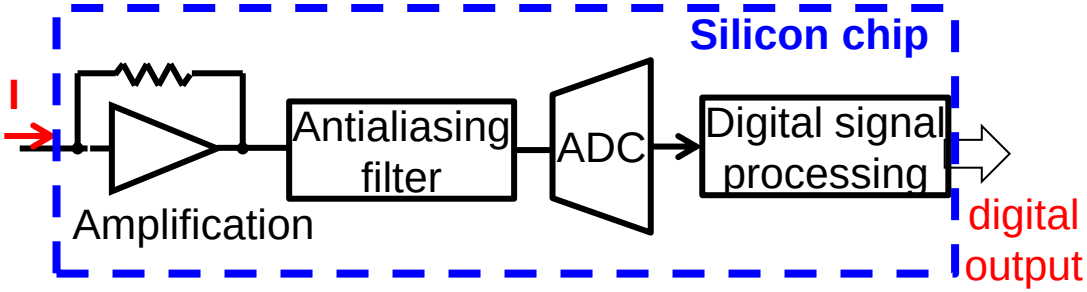

+ flexibility
- high speed ADC
- high speed DSP

- Complexity
- Power consumption
- "Digital noise"
- Trade-off on the CMOS tech.

Avoid if possible

Passive multiplier

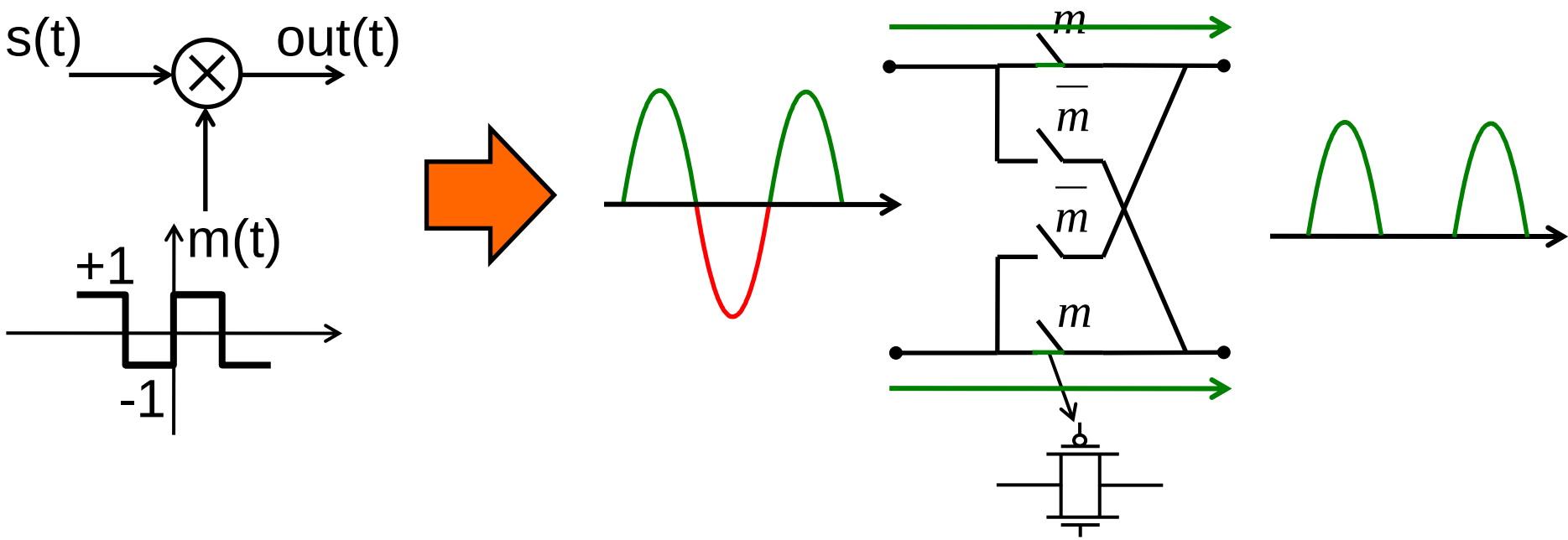

Passive multiplier

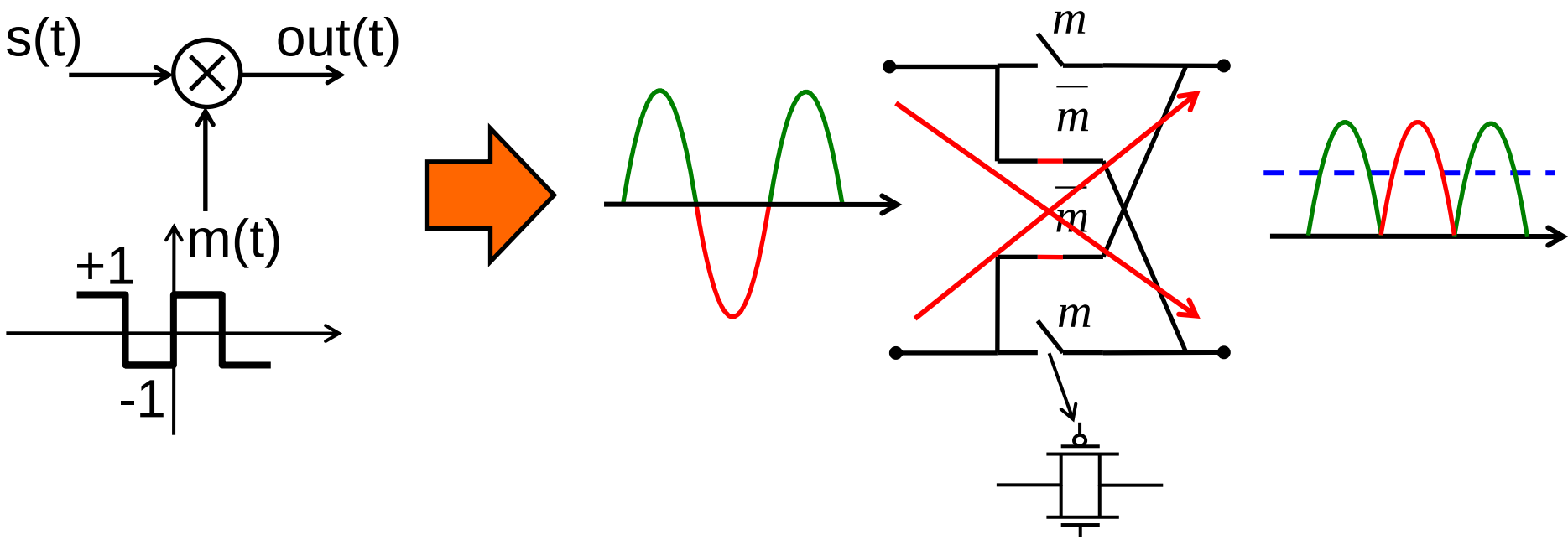

Rail-to-rail multiplier

MOSFET operating as switch, no (low) dc current bias

reduction of the flicker noise

Frequency analysis - signal

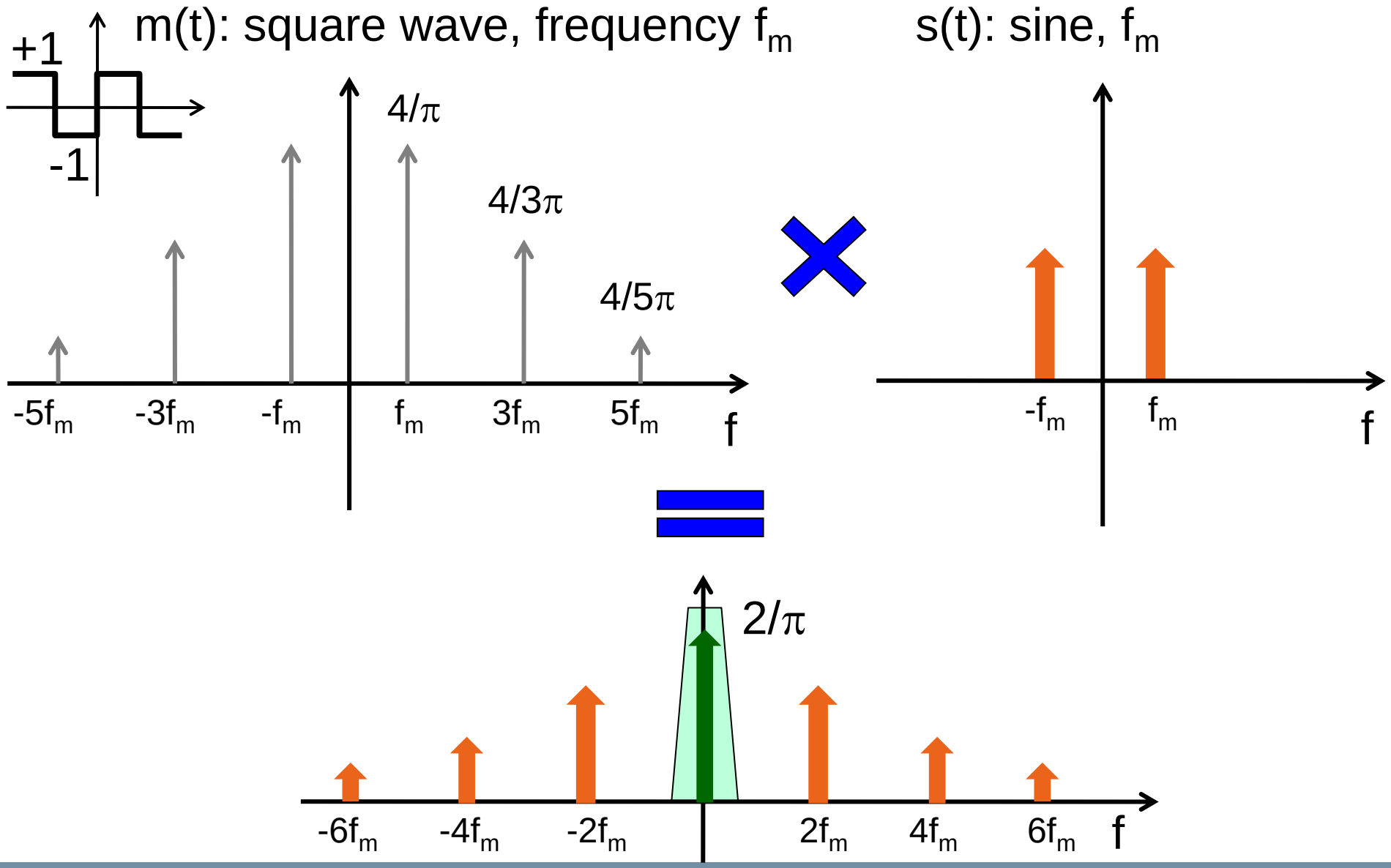

Frequency analysis - noise

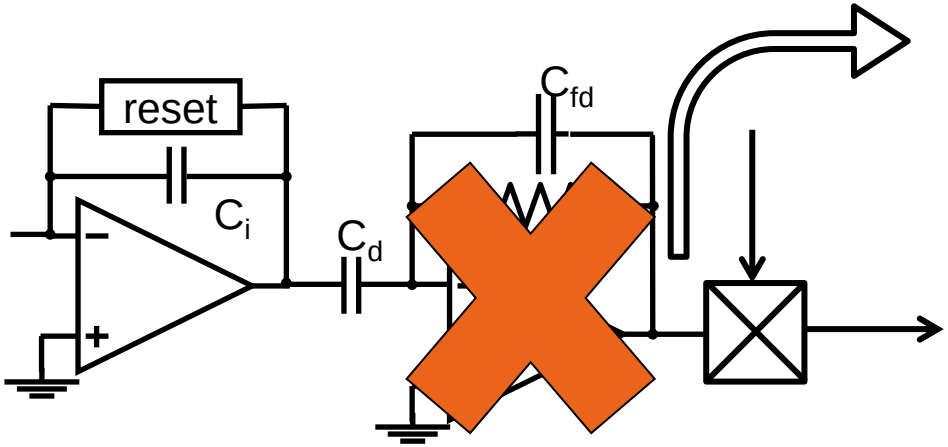

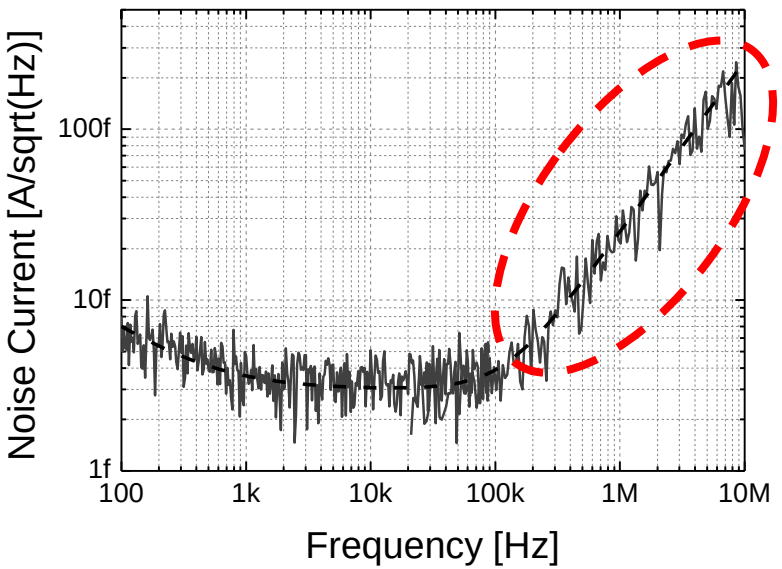

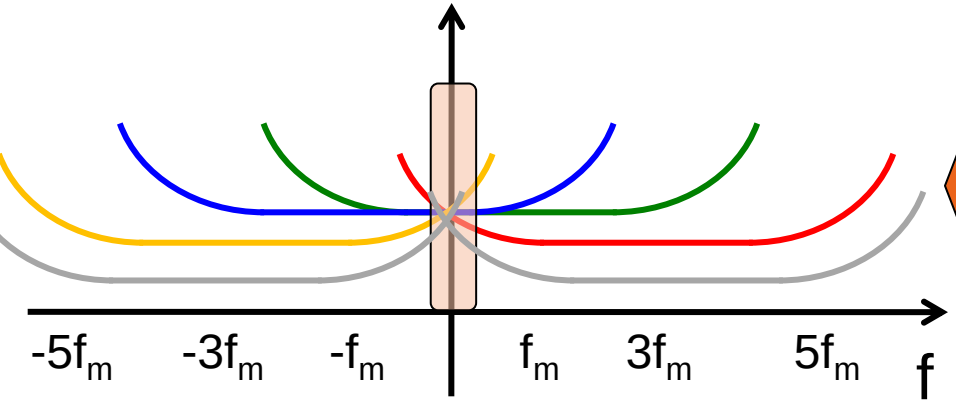

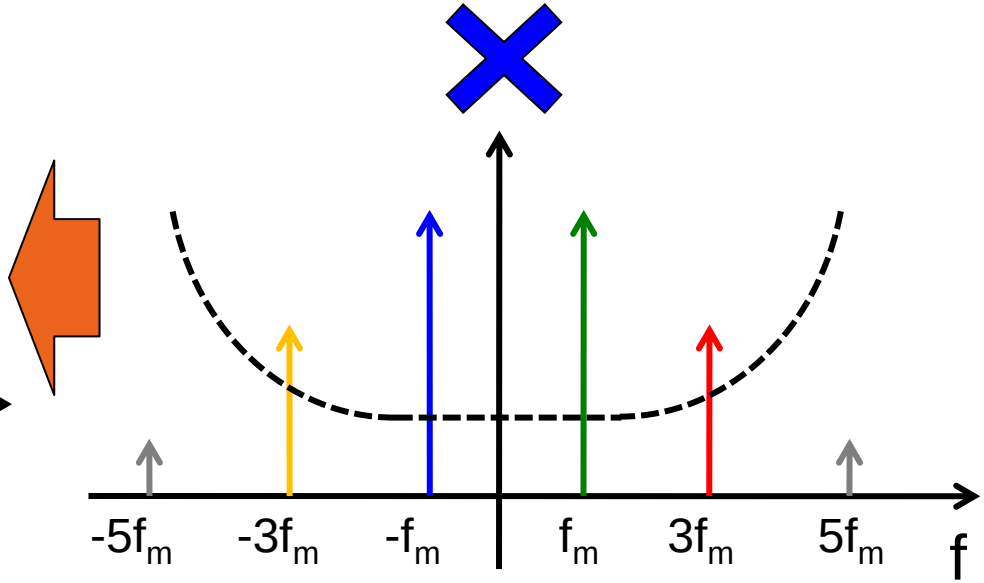

High frequency noise → DC!

Frequency analysis - noise

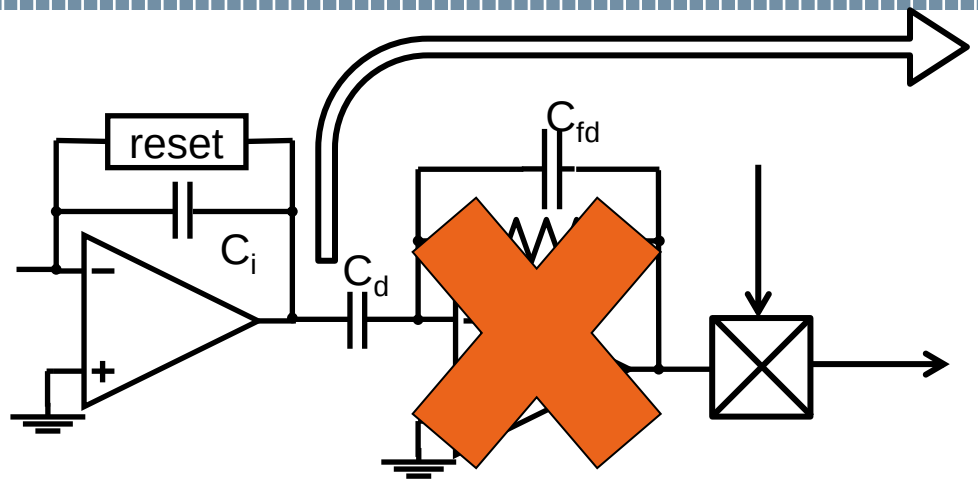

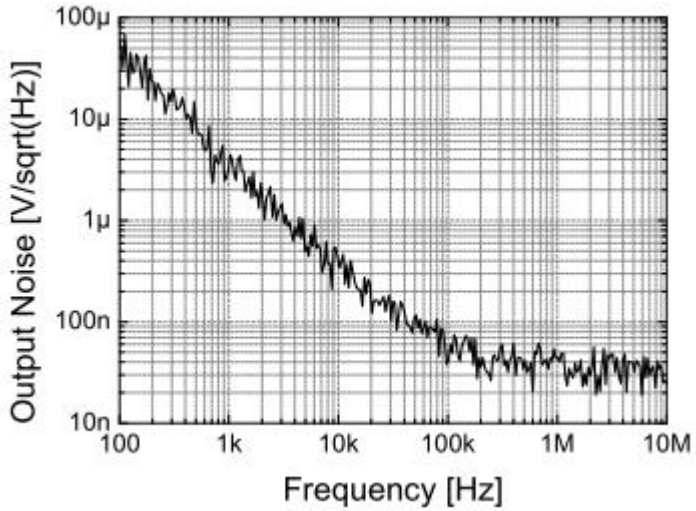

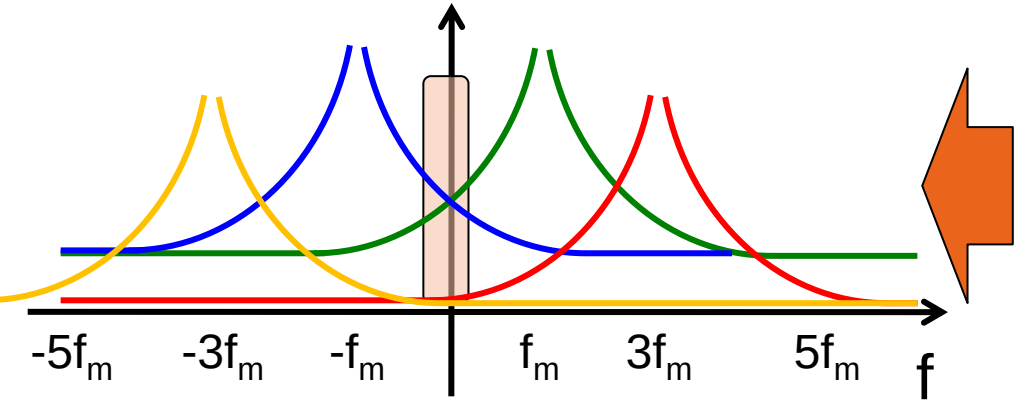

≈ noise of ideal multiplier

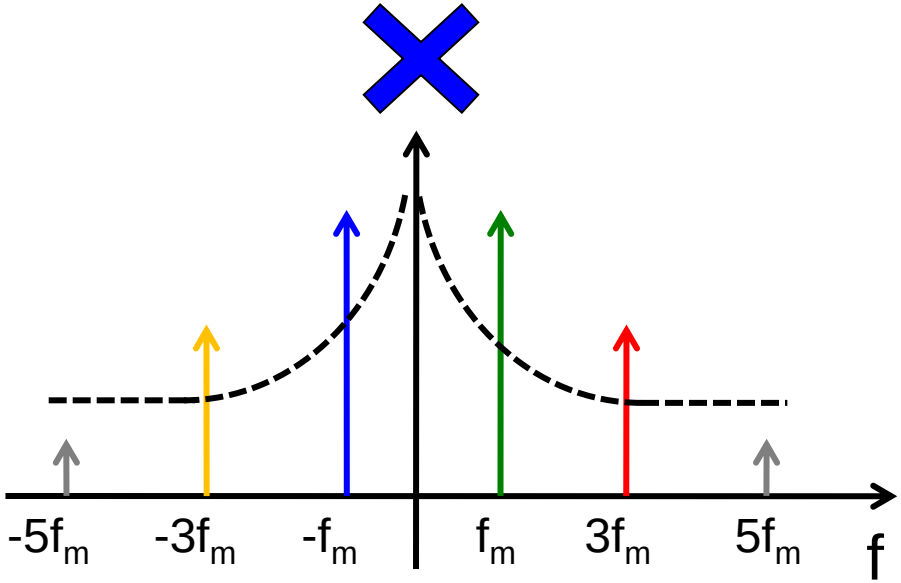

Simple integrated LIA

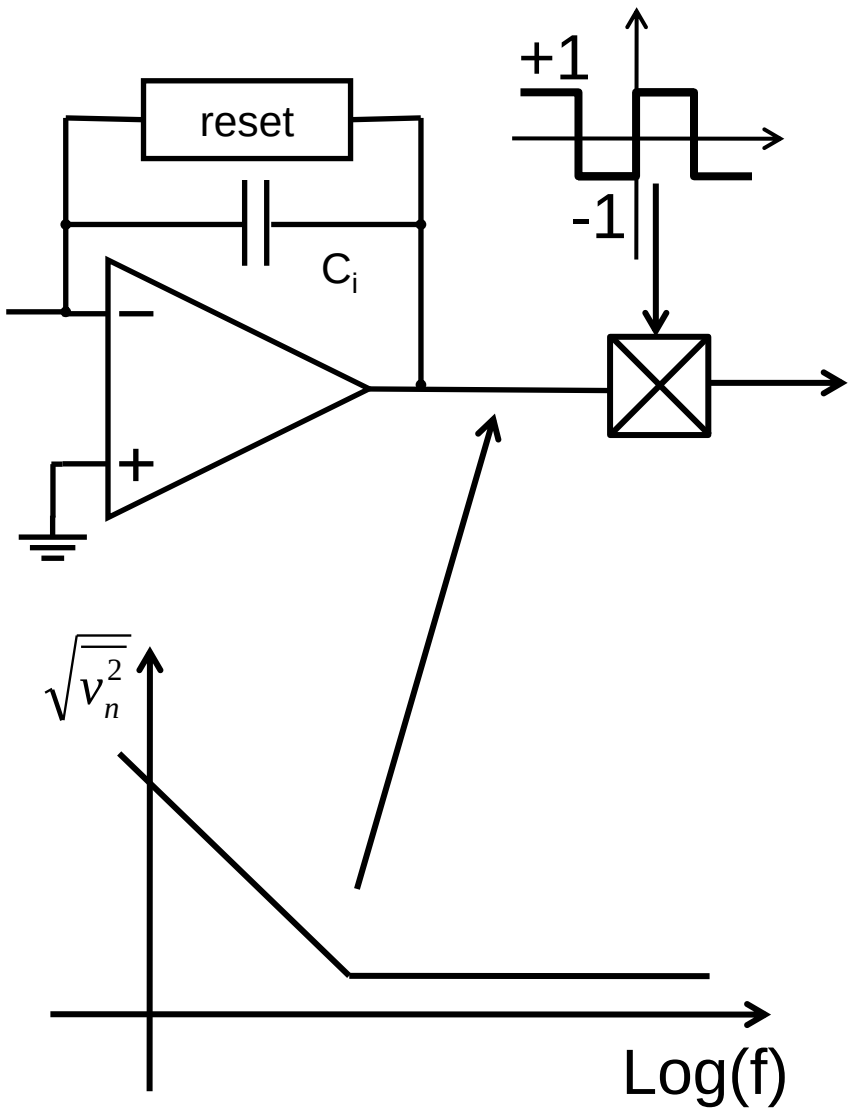

1. Passive multiplier
2. Keep a low HF noise

   maximum SNR reduced to 20% respect to an ideal multiplier ***OK***

3. Integrator: phase shift of 90°, easily compensated
4. Simple digital control of the multiplier
5. Used to limit the effect of 1/f noise (chopper amplifier)

A step further…

Smart Sensor System: sensor+electronics co-design and co-packaging

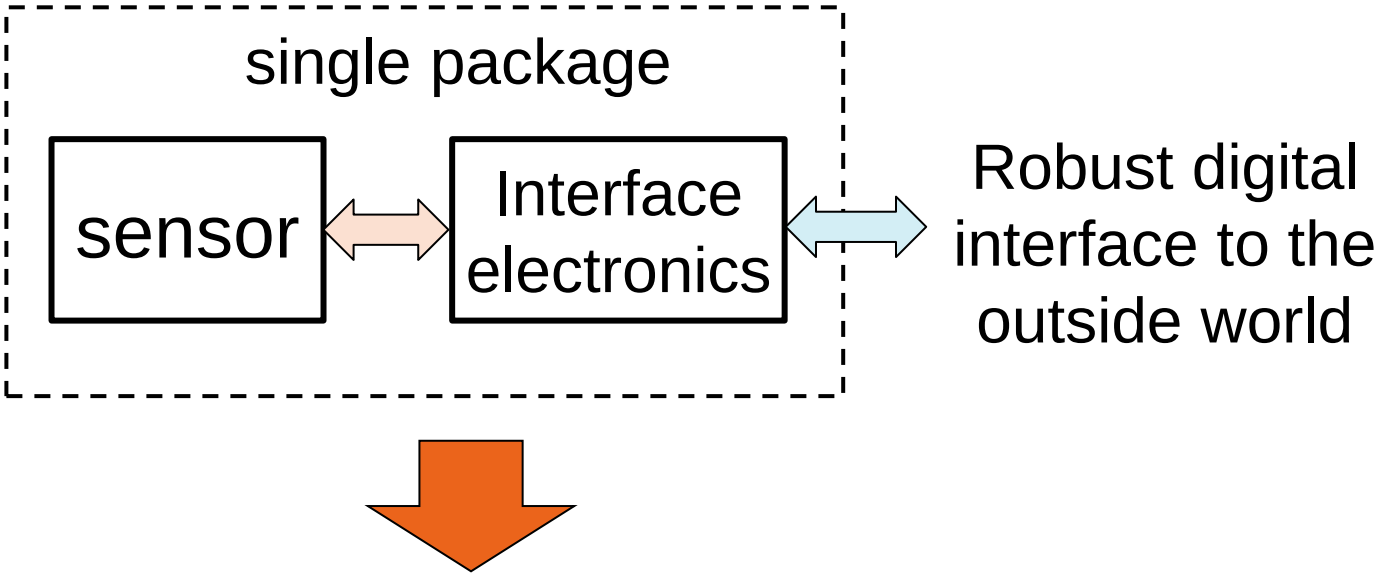

single chip combining sensor and electronics

- Light: CMOS imager
- Capacitance: fingerprint reader
- Temperature

MEMS technology:

- Magnetic field: compass
- Force: accelerometer, gyroscope

Optimal sensor-electronics connection, multichannel

Single chip Airborne PM Detector

CMOS Particulate Matter detector:

See the lesson on differential measurements

- Compactness
- Low cost / mass production
- Scaled lithography for microelectrodes on chip
- Integrated electronics with ZeptoFarad resolution

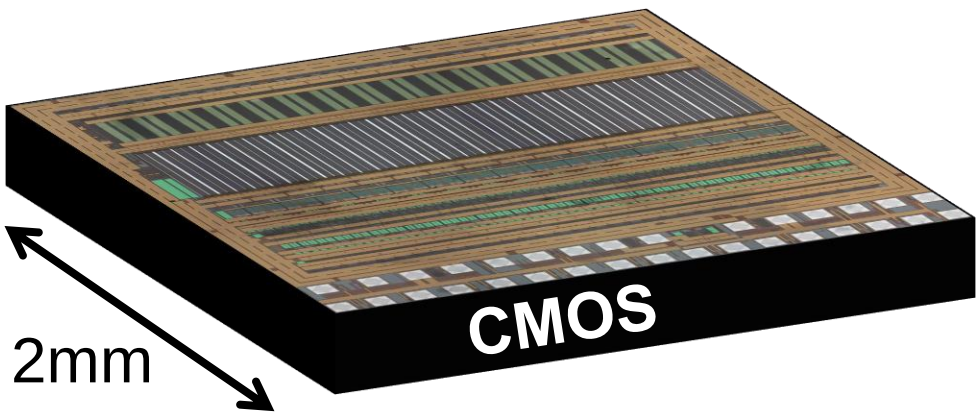

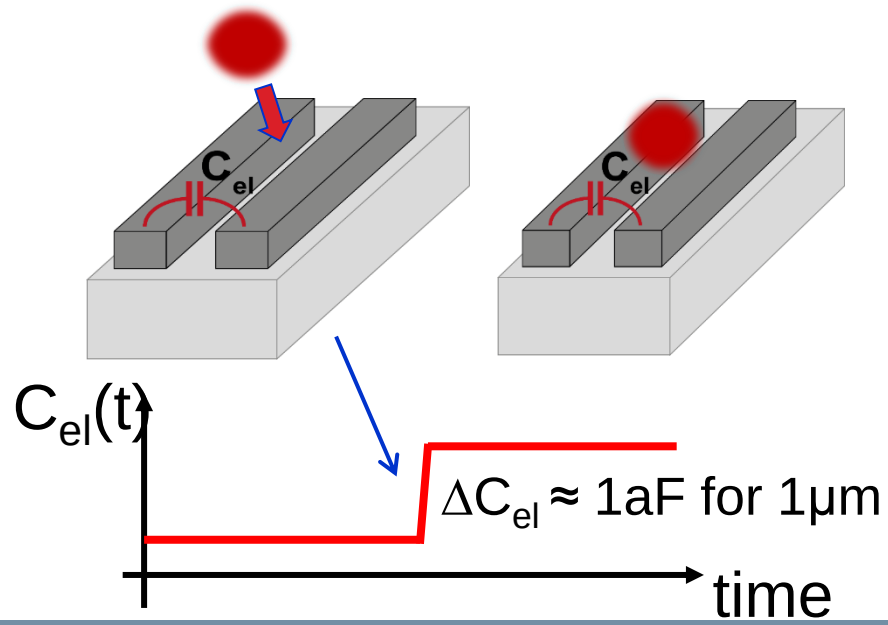

P. Ciccarella, et al., *IEEE JSSC* 2016

On-chip electrodes

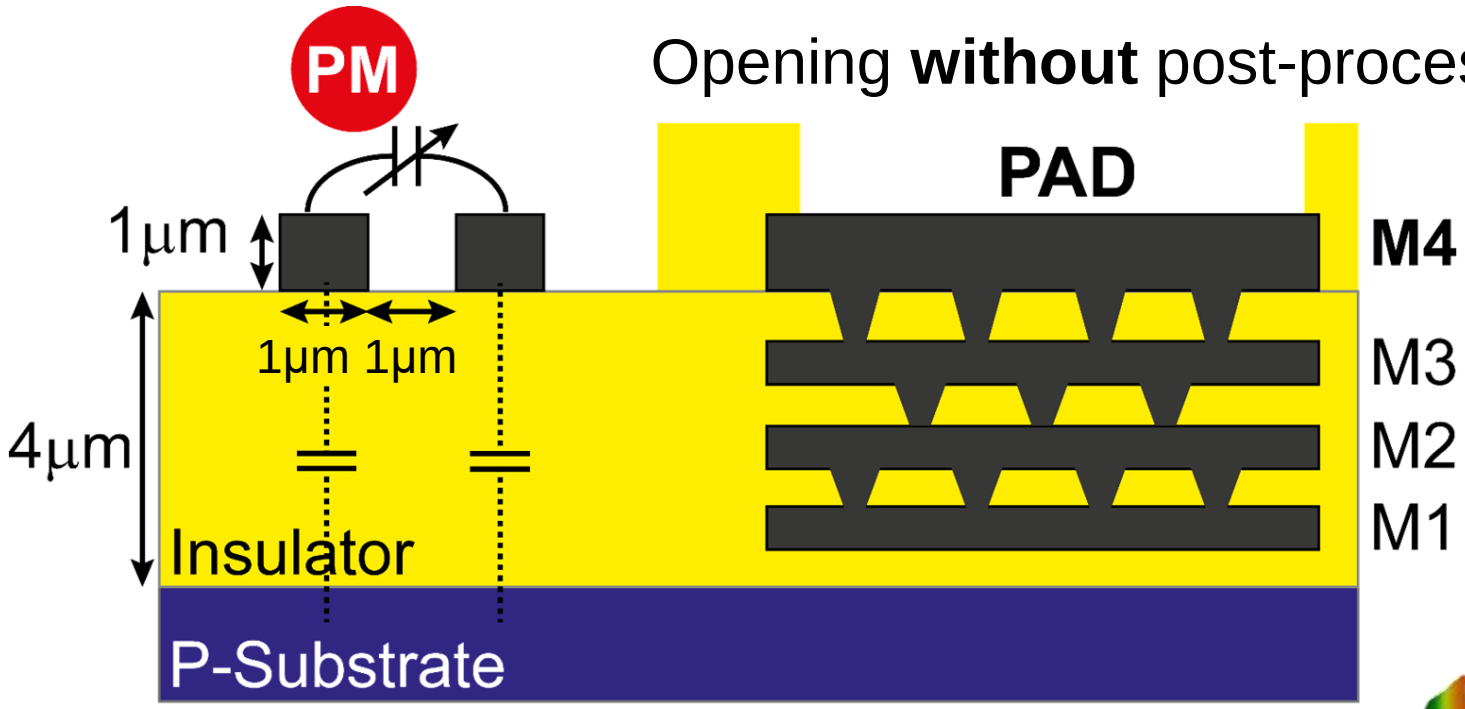

Opening **without** post-processing steps

Top metal for electrodes fabrication

AFM Check

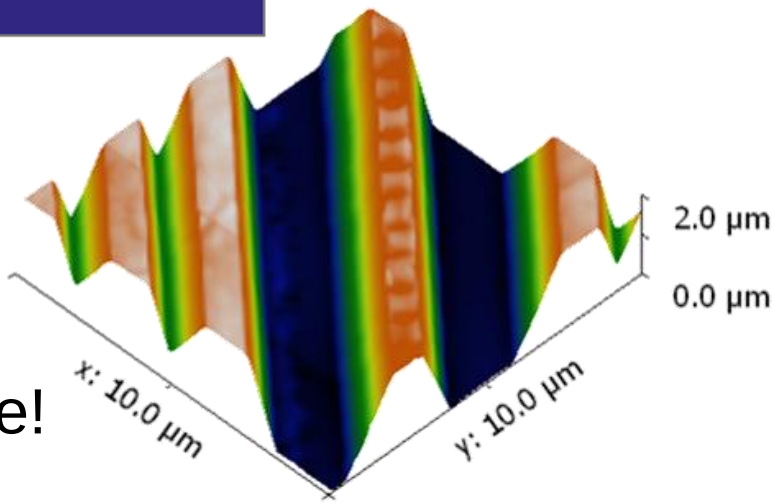

AMS 0.35μm standard CMOS technology

Electrodes on chip: stray cap. fF range!

Interdigitated Electrodes

Sensitive area ~ 1mm^2

Interdigitated structure

- C_{el} = 15pF
- ΔC = 700zF (1μm)

$$\frac{\Delta C_{el}}{C_{el}} = \frac{700zF}{15pF} \sim \boxed{0.050ppm!}$$

Differential architecture
Multichannel architecture

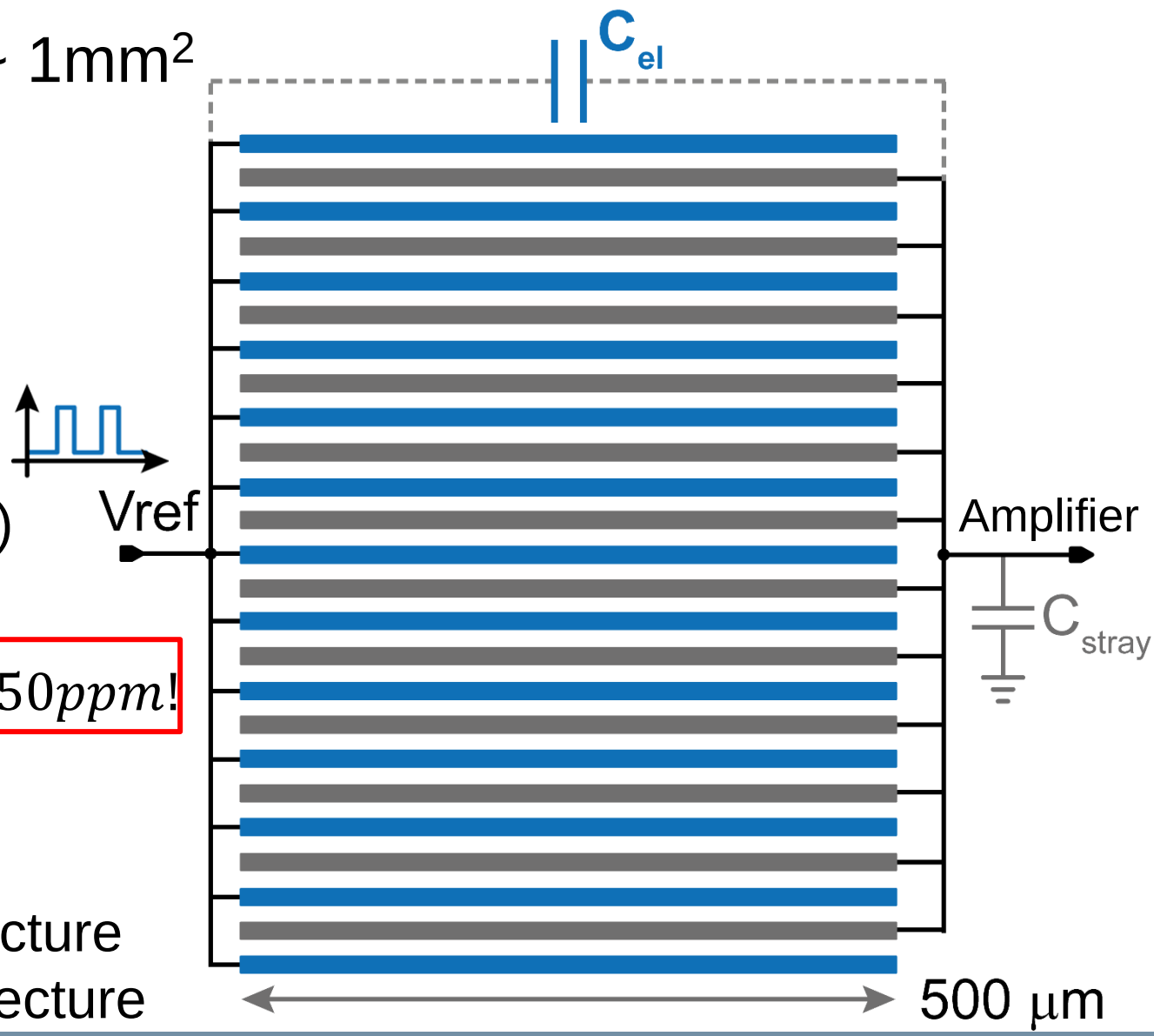

Area-Resolution tradeoff

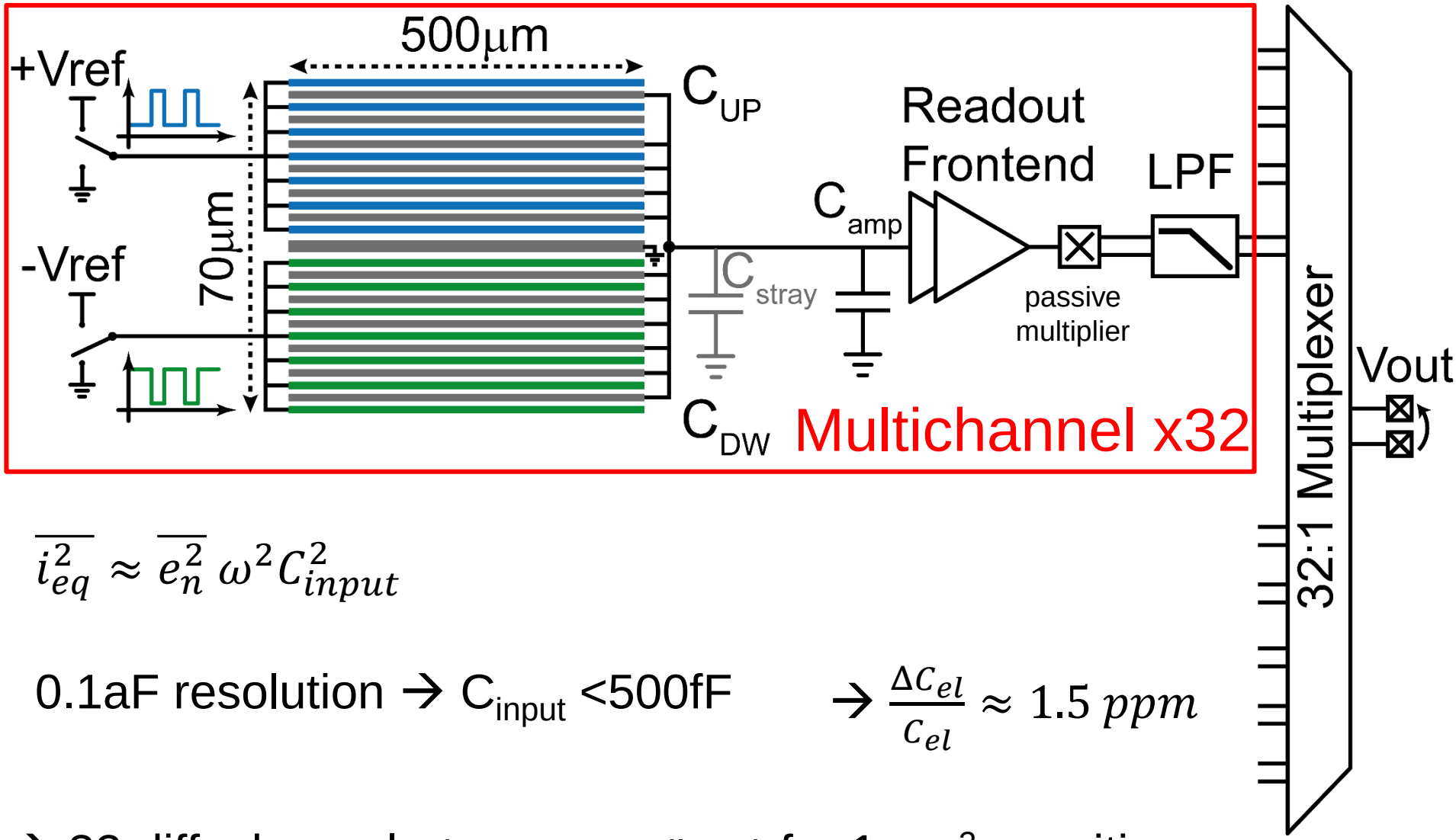

$$\overline{i_{eq}^2} \approx \overline{e_n^2}\,\omega^2 C_{input}^2$$

0.1aF resolution → C_{input} <500fF → $\frac{\Delta C_{el}}{C_{el}} \approx 1.5\ ppm$

→ 32 diff. channels (Amp+LIA+Filters) for 1mm^2 sensitive area

Low pass filter

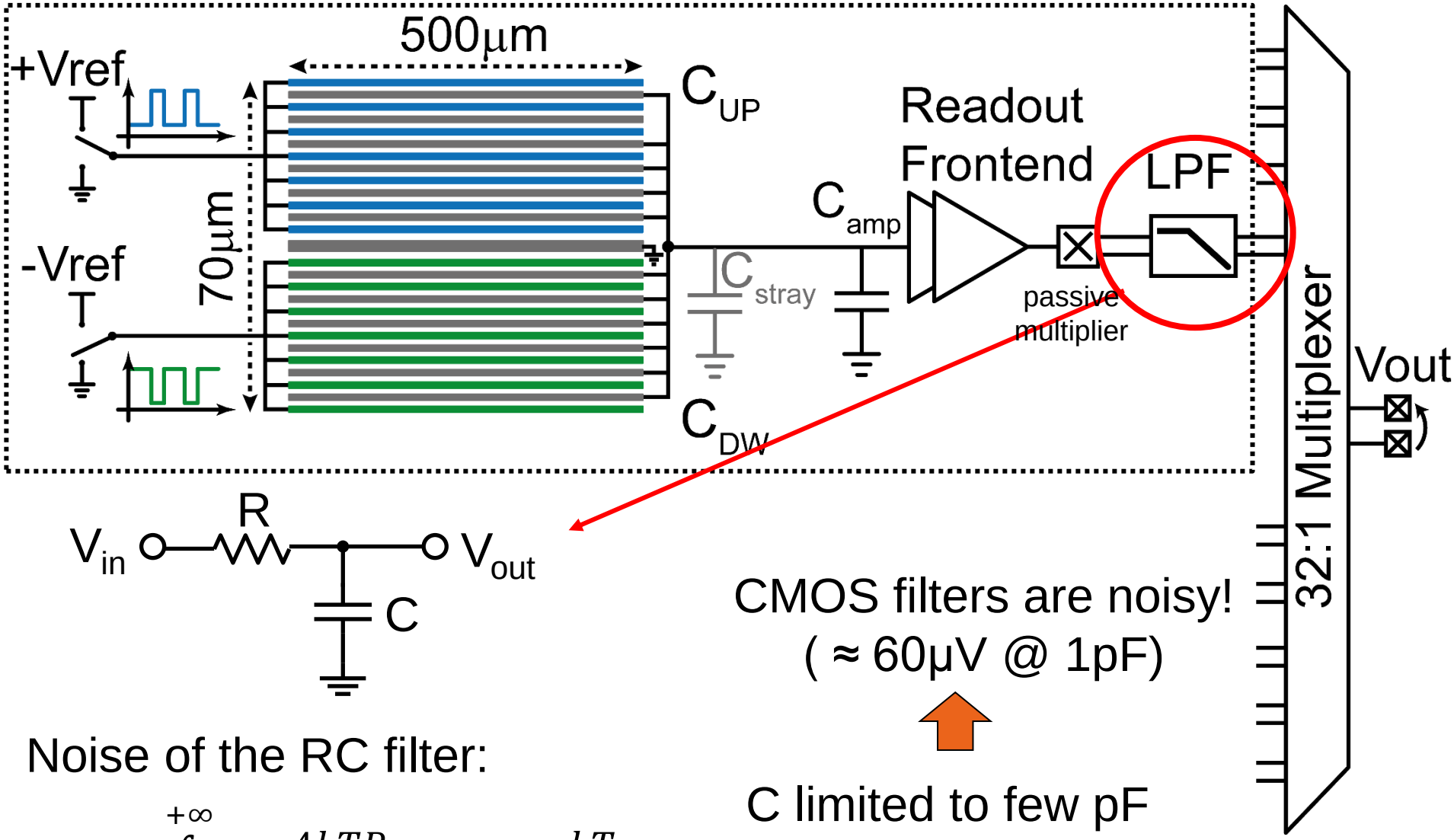

CMOS filters are noisy!
(≈ 60µV @ 1pF)

C limited to few pF

Noise of the RC filter:

$$\overline{N^2} = \int_0^{+\infty} \frac{4kTR}{|1+\omega^2R^2C^2|}\,d\omega = \frac{kT}{C}$$

Electrodes Mismatch Compensation

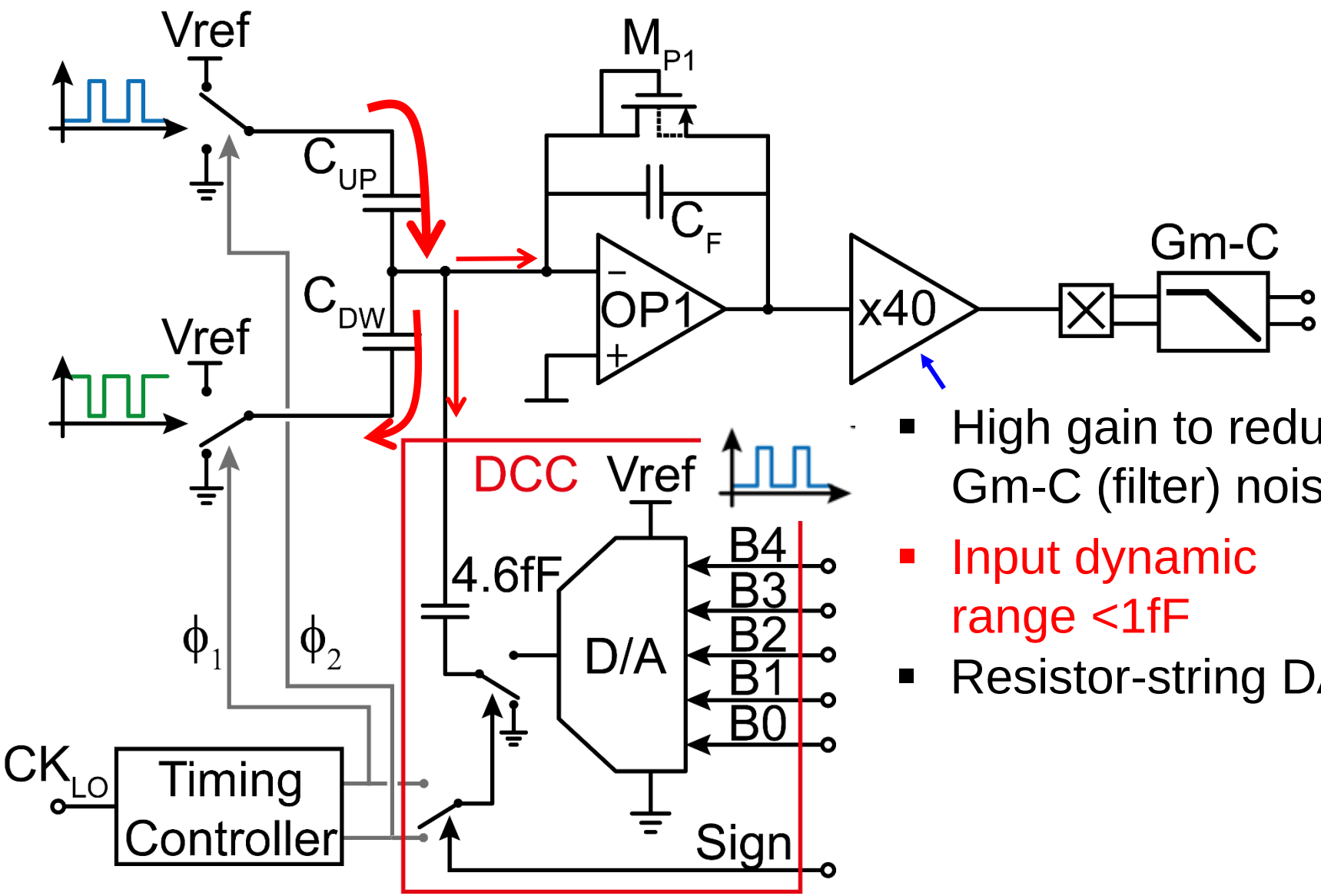

- High gain to reduce Gm-C (filter) noise
- Input dynamic range <1fF
- Resistor-string DAC

DCC Characterization

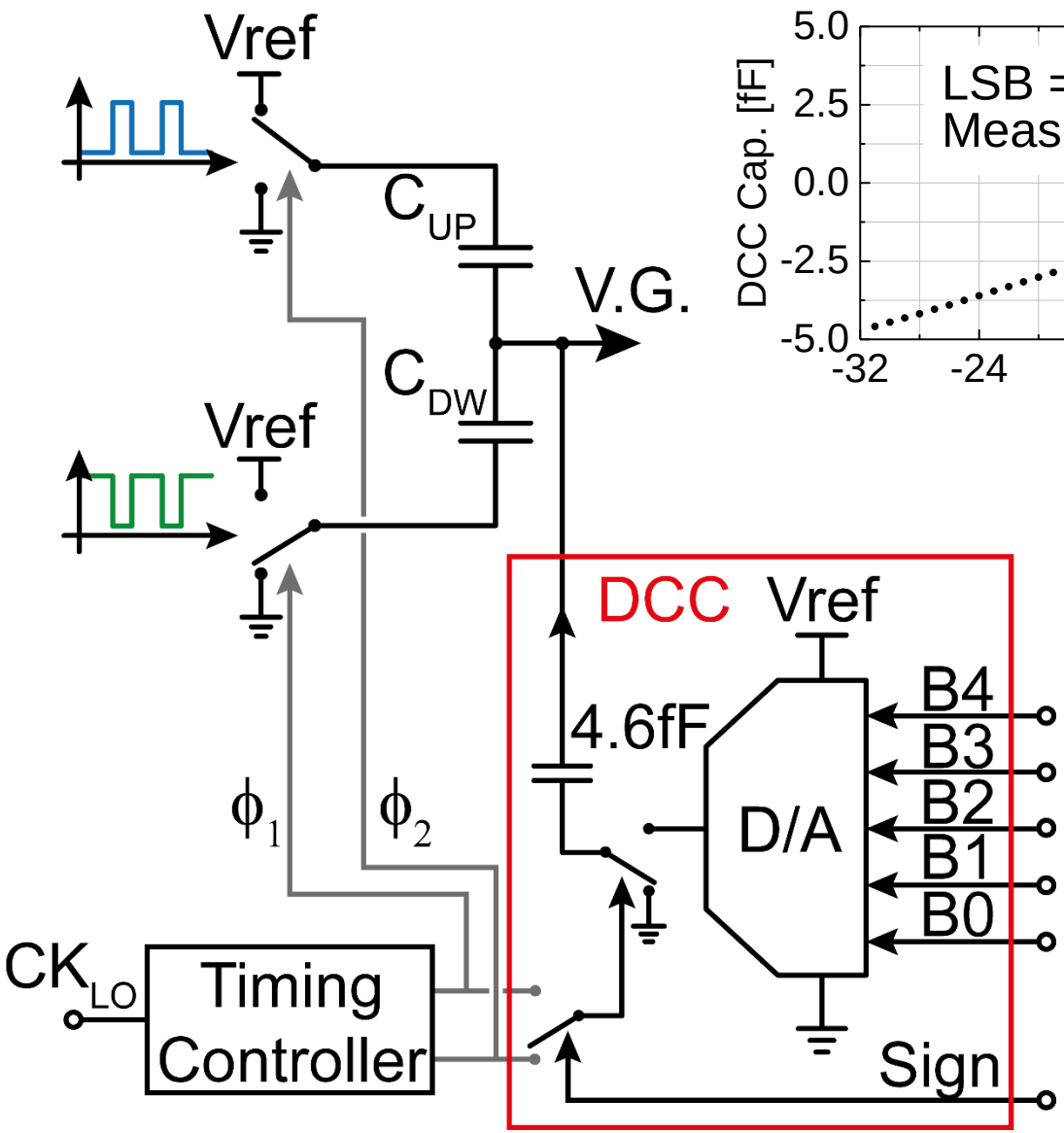

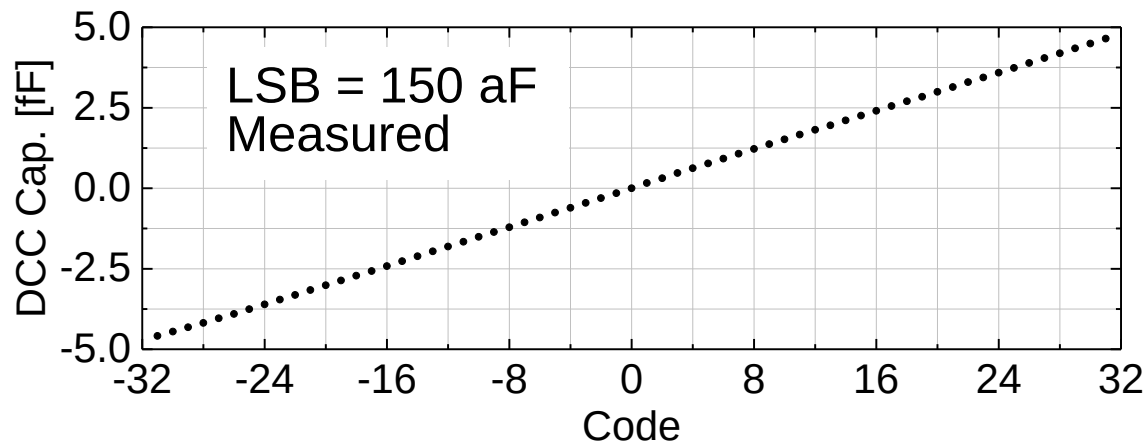

- Input dynamic range <1fF
- Resistor-string DAC
- LSB = 150aF
- 15aF DNL (0.1LSB)
- Automatic calibration

Measured Capacitive Noise

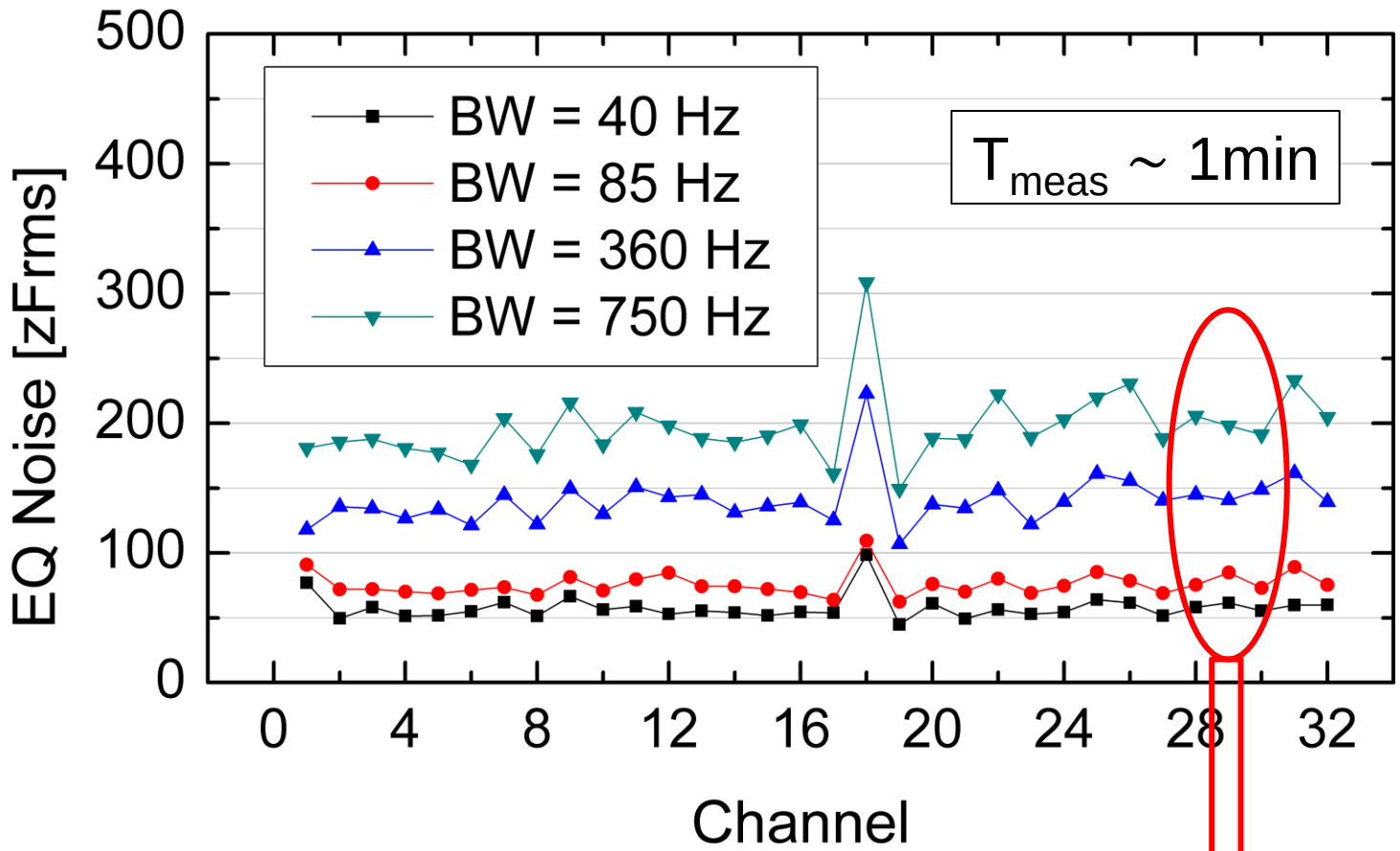

- 65zF rms Average Noise (BW = 40Hz)
- Noise $\propto \sqrt{BW}$

Exp. Results: PM Detection Examples

- Single talc particle deposition (ε_r = 2.4)

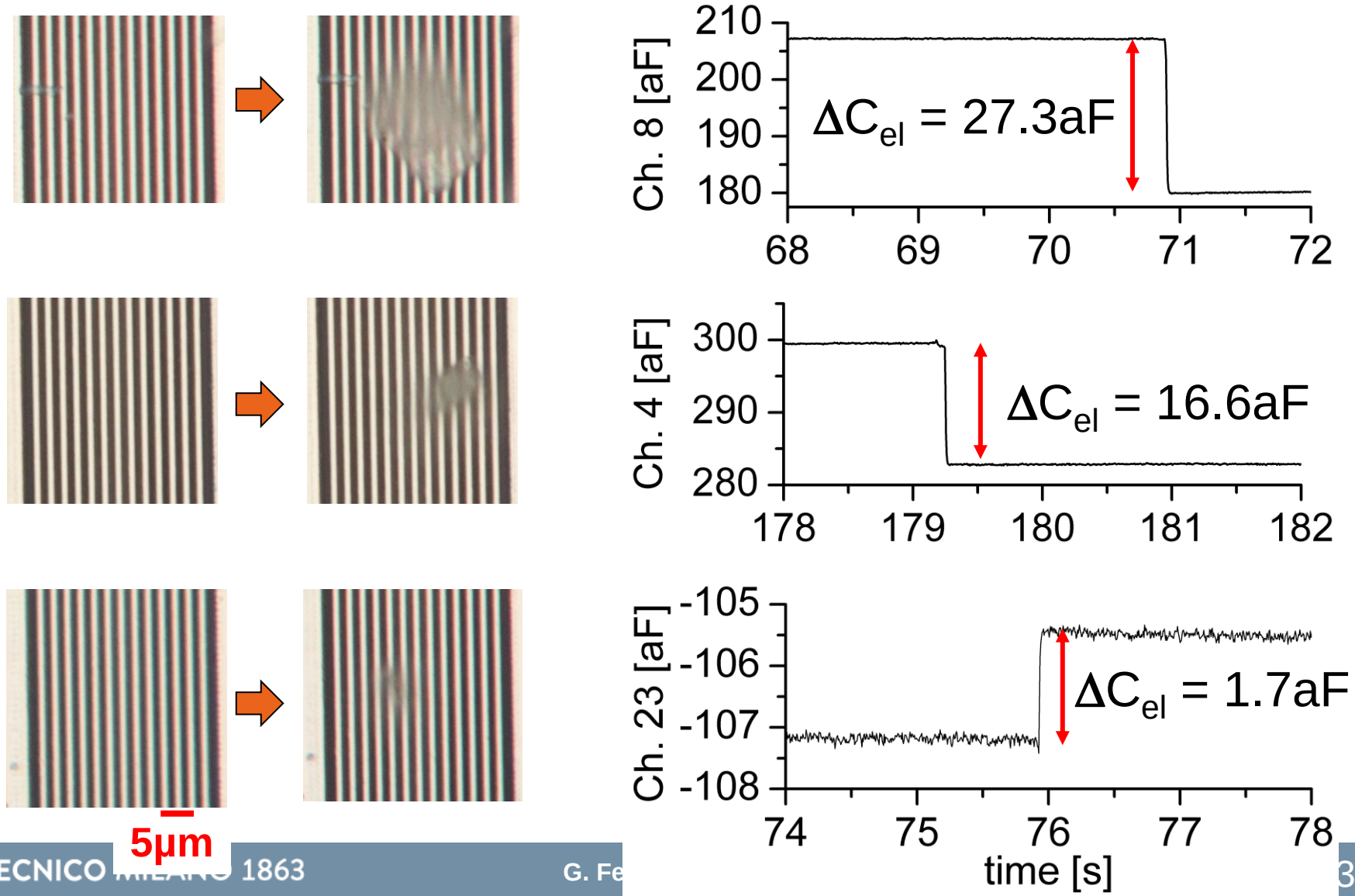

A step further…

Smart Sensor System: sensor+electronics co-design

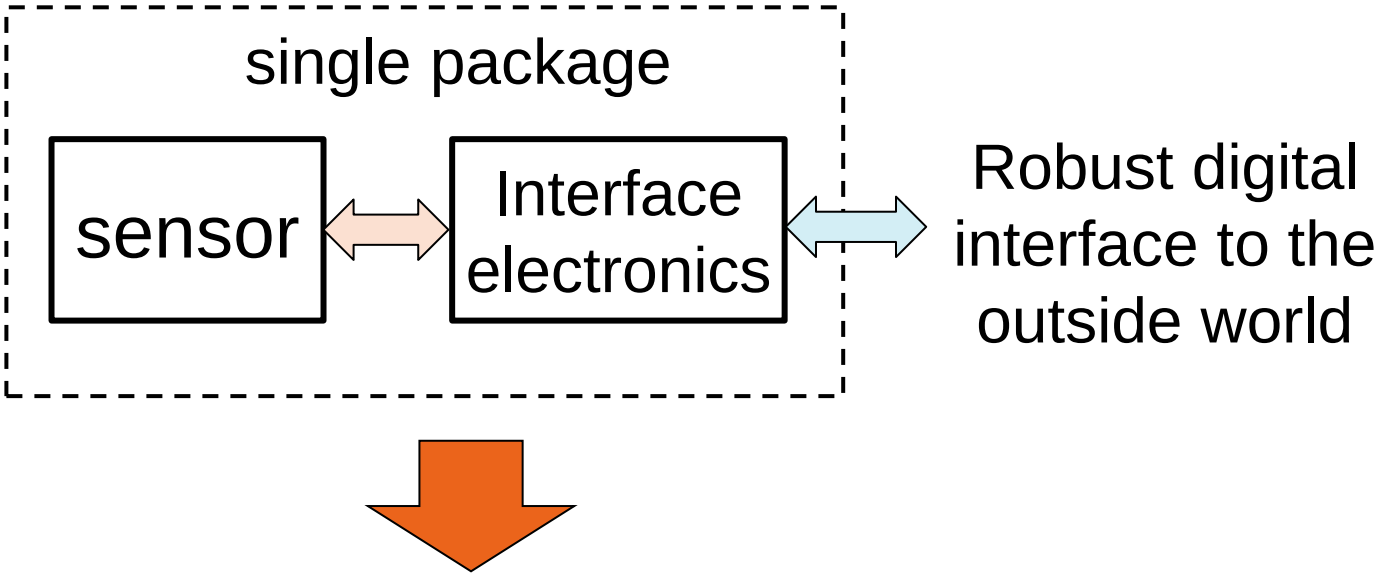

single chip combining sensor and electronics

- Light: CMOS imager
- Capacitance: fingerprint reader
- Temperature

MEMS technology:

- Magnetic field: compass
- Force: accelerometer, gyroscope

Biosensor ?

CMOS biochip

2+1 major components in a CMOS biochip

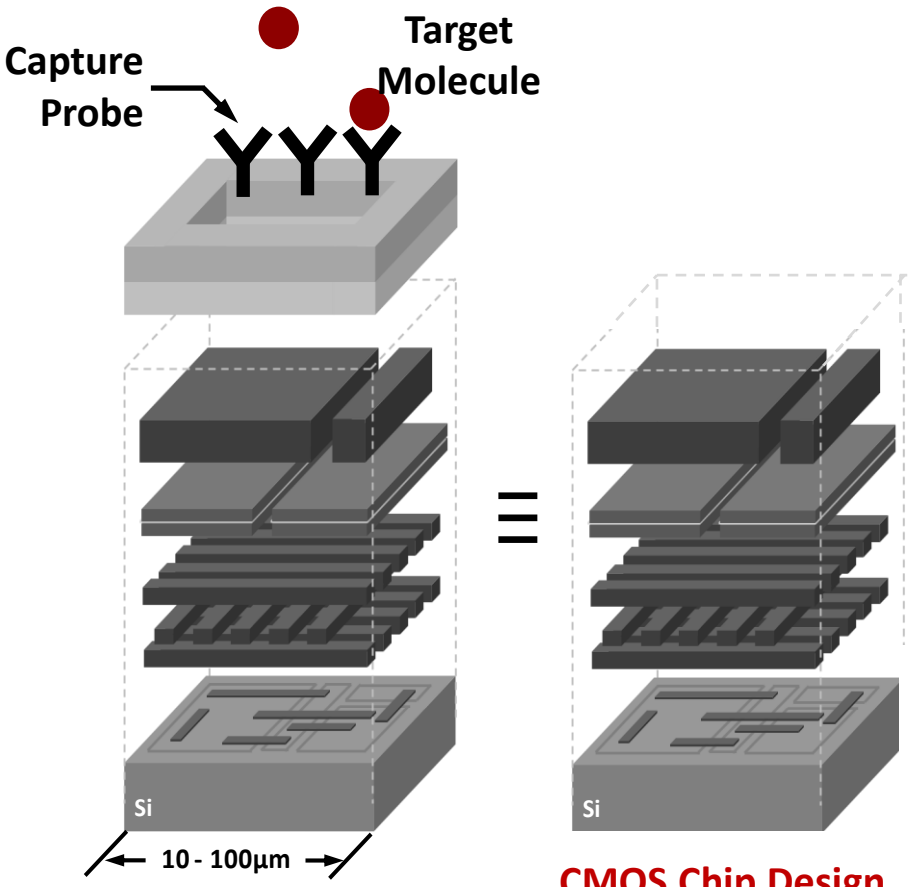

CMOS Chip Design
(Analog/Mixed-Mode IC D

Hassibi, SiNano 2012

- oxide
- corrosion (Cl^-)
- biocompatibility?

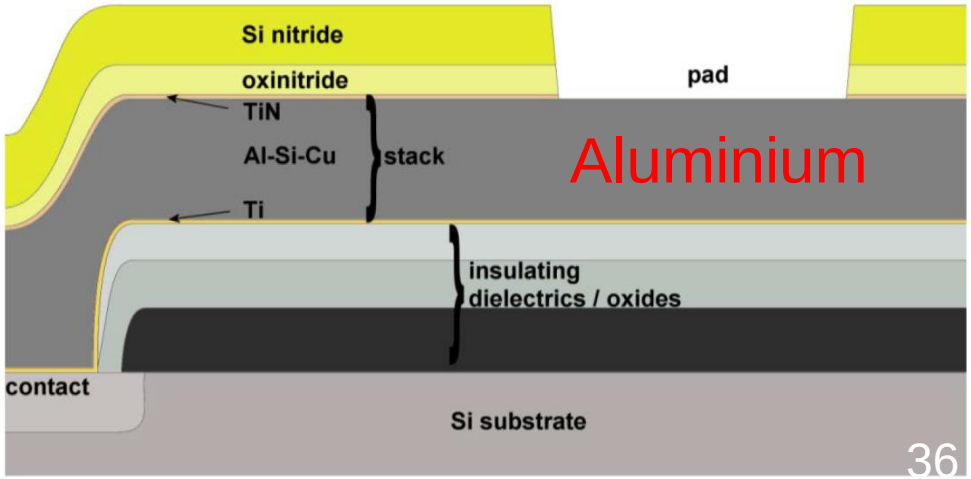

Graham et al., Sensors p.4943, 2011

CMOS biochip

2+1 major components in a CMOS biochip

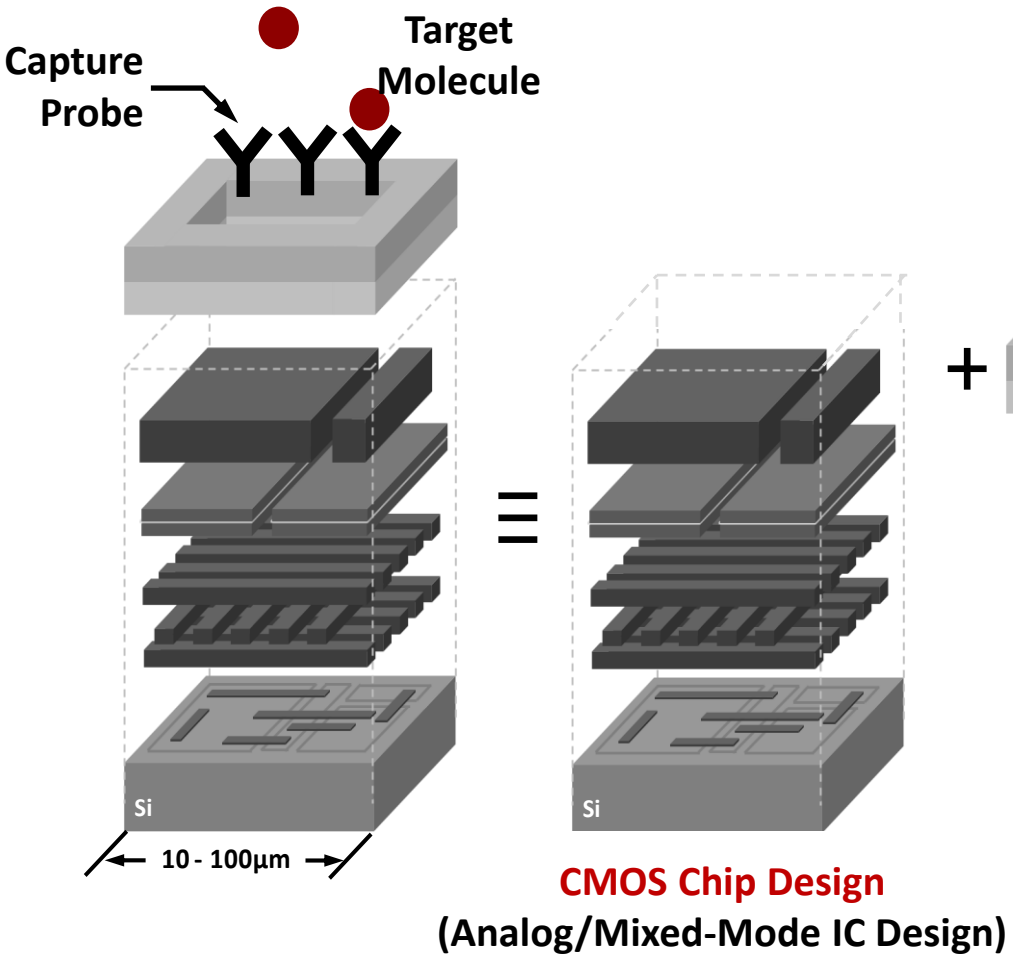

Hassibi, SiNano 2012

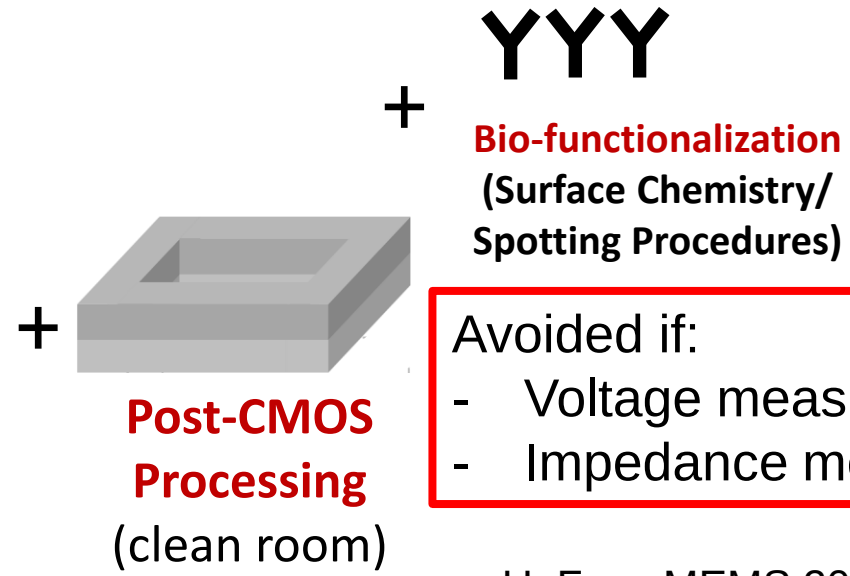

Avoided if:
- Voltage meas.
- Impedance meas

U. Frey, MEMS 2007

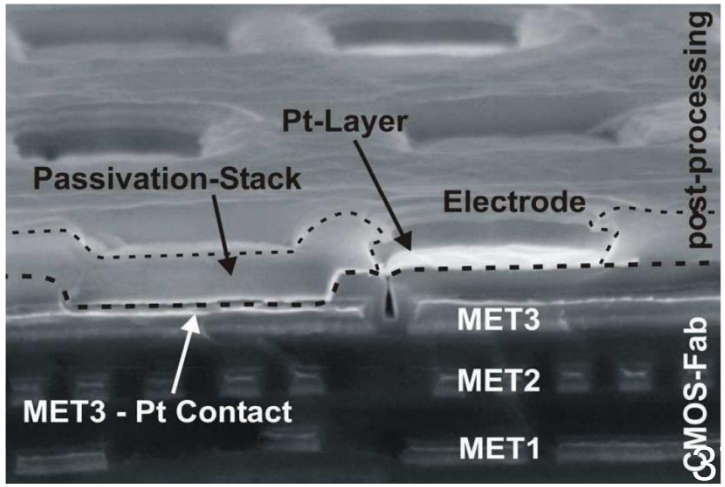

High-density MicroElectrode Array (MEA)

J. Dragas, V. Viswam, A. Shadmani, Y. Chen, R. Bounik, A. Stettler, M. Radivojevic, S. Geissler, M. E. J. Obien, J. Müller, and A. Hierlemann, “In Vitro Multi-Functional Microelectrode Array Featuring 59760 Electrodes, 2048 Electrophysiology Channels, Stimulation, Impedance Measurement, and Neurotransmitter Detection Channels,” *IEEE J. Solid-State Circuits*, vol. 52, no. 6, pp. 1576–1590, 2017

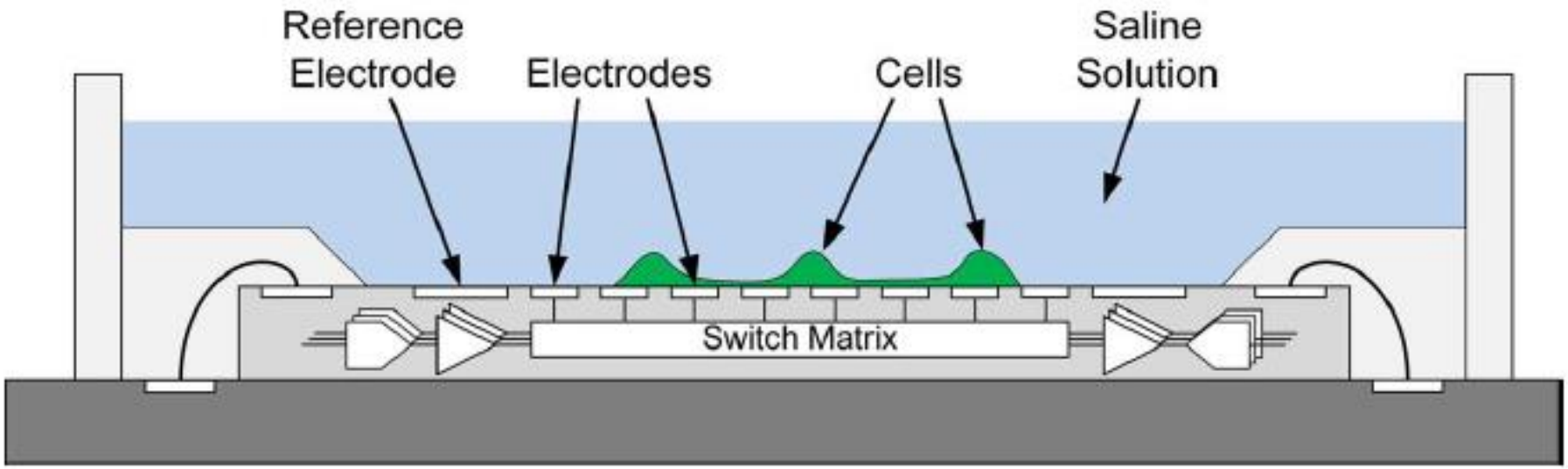

CMOS chip as active substrate for neural stimulation and recording

X. Yuan, A. Hierlemann, and U. Frey, “Extracellular Recording of Entire Neural Networks Using a Dual-Mode Microelectrode Array With 19,584 Electrodes and High SNR,” *IEEE J. Solid-State Circuits*, pp. 1–10, 2021

D. Tsai, D. Sawyer, A. Bradd, R. Yuste, and K. L. Shepard, “A very large-scale microelectrode array for cellular-resolution electrophysiology,” *Nat. Commun.*, vol. 8, no. 1, 2017

C. Laborde, F. Pittino, H. A. Verhoeven, S. G. Lemay, L. Selmi, M. A. Jongsma, and F. P. Widdershoven, “Real-time imaging of microparticles and living cells with CMOS nanocapacitor arrays.,” *Nat. Nanotechnol.*, vol. 10, no. 9, pp. 791–5, 2015.

High-density MicroElectrode Array

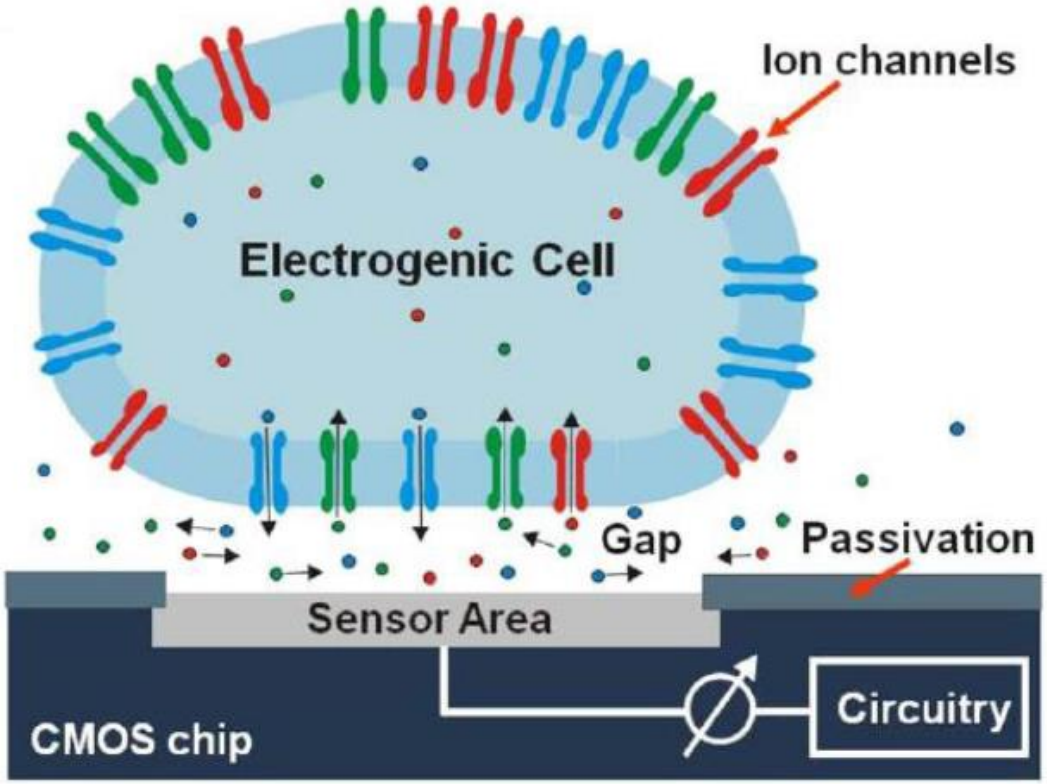

- Electrical stimulation
- Action potential recording
- Neurotransmitter detection (fast scan voltammetry)
- Impedance Spetroscopy

M. Ballini, et al. *IEEE J. Solid-State Circuits*, vol. 49, no. 11, pp. 2705–2719, 2014.

High-density MicroElectrode Array

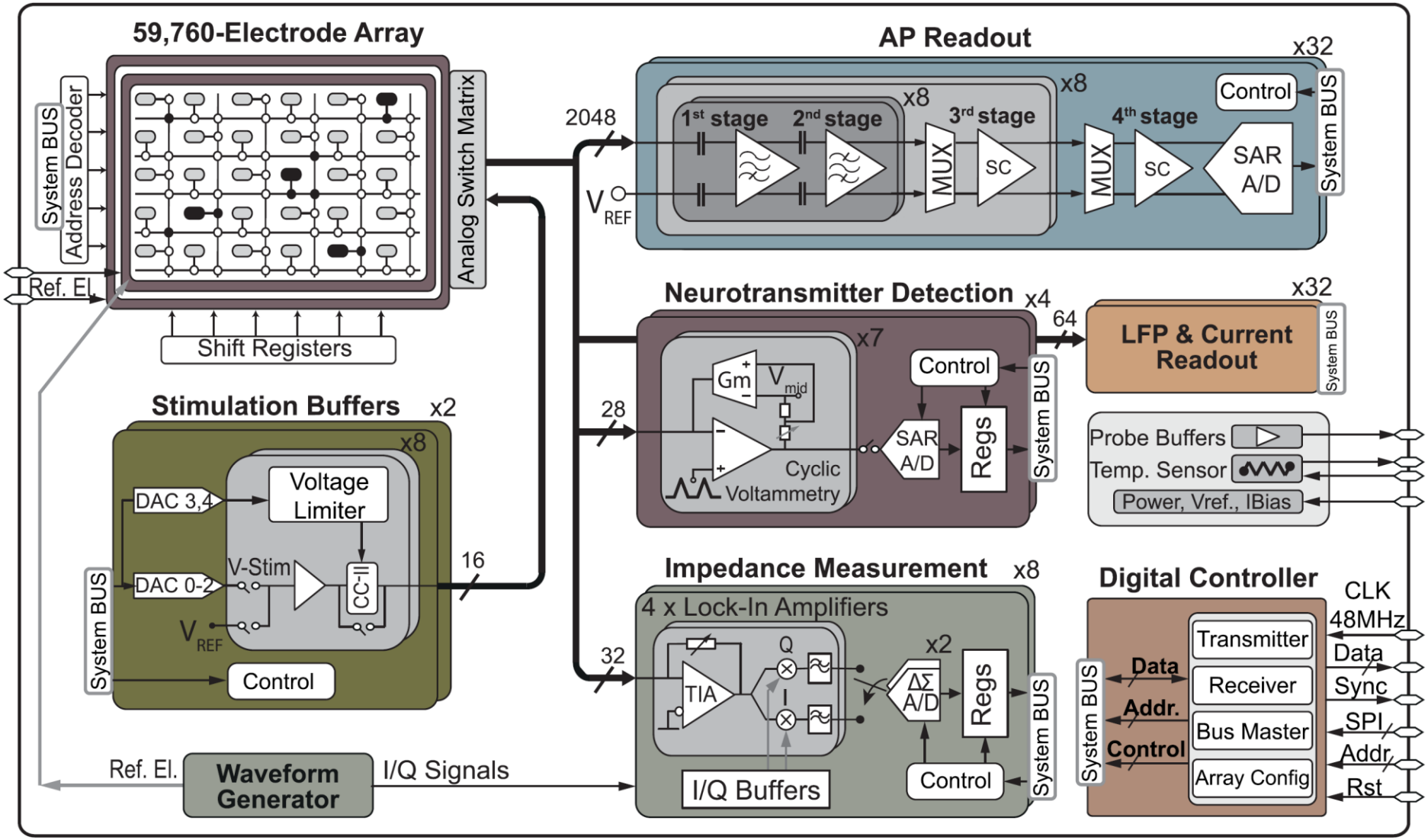

High-density MicroElectrode Array

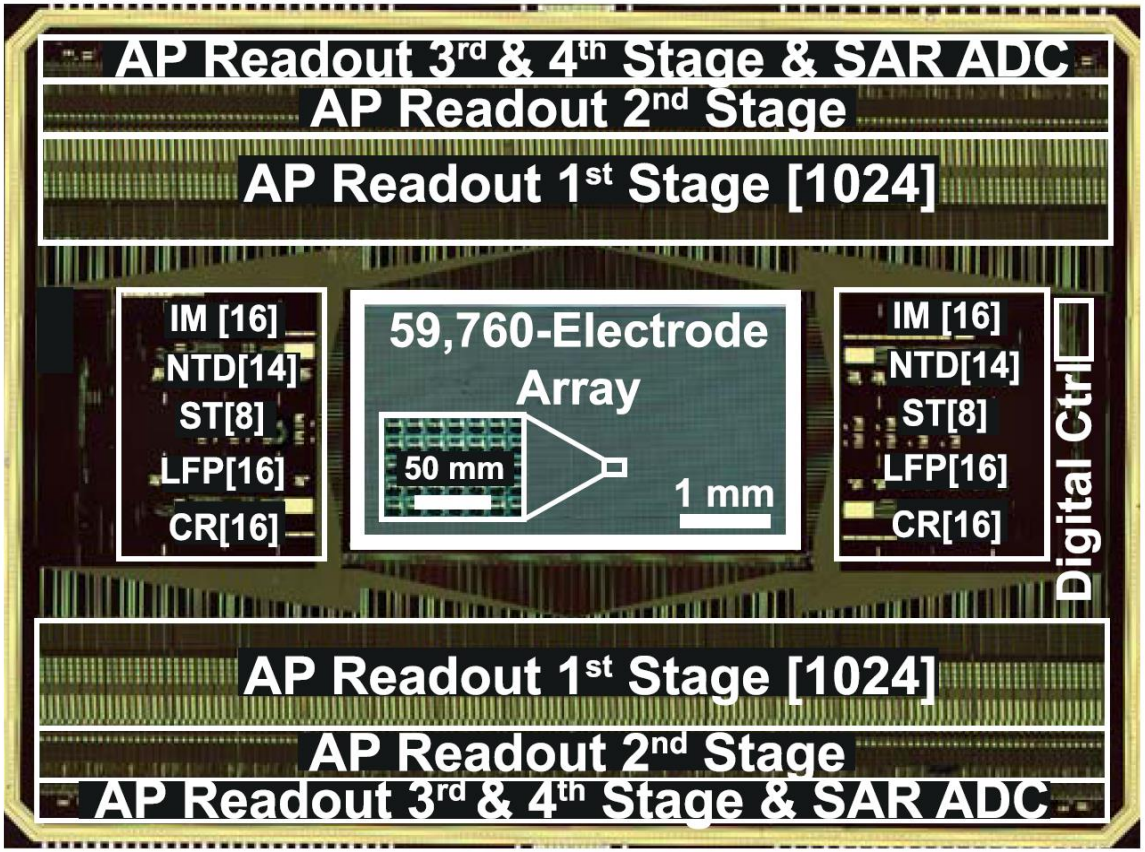

180nm CMOS technology + post processing

7.5 x 3 μm^2

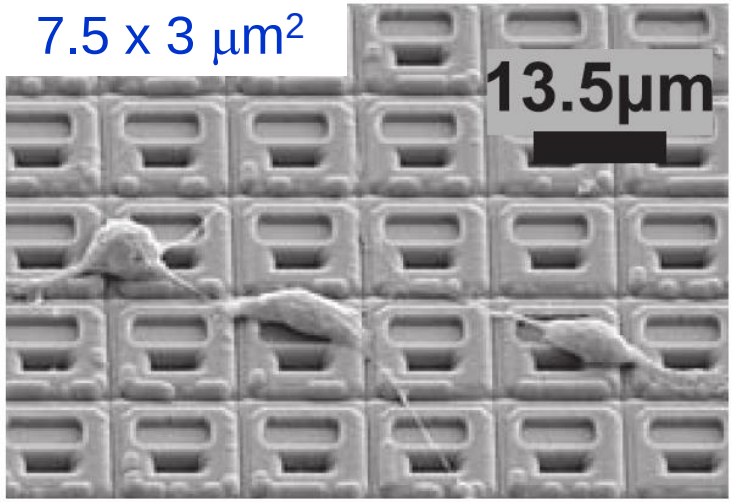

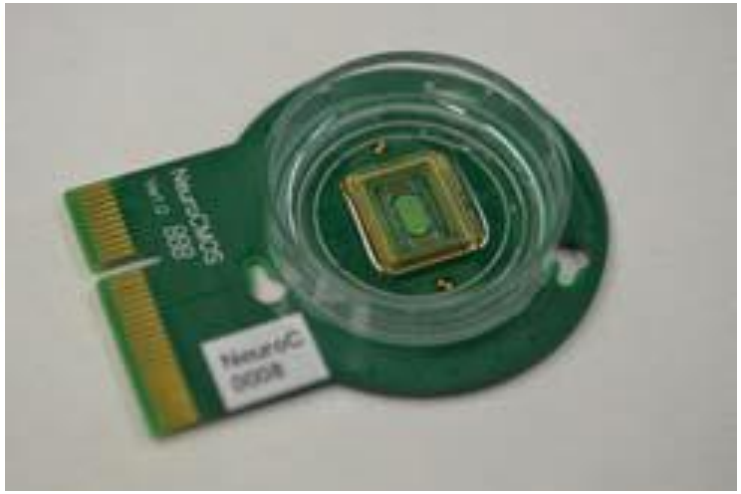

Chip: 12 x 8.9 mm^2; sensing area: 2.43 x 4.48 mm^2; power dissipation: 86mW

High-density MicroElectrode Array

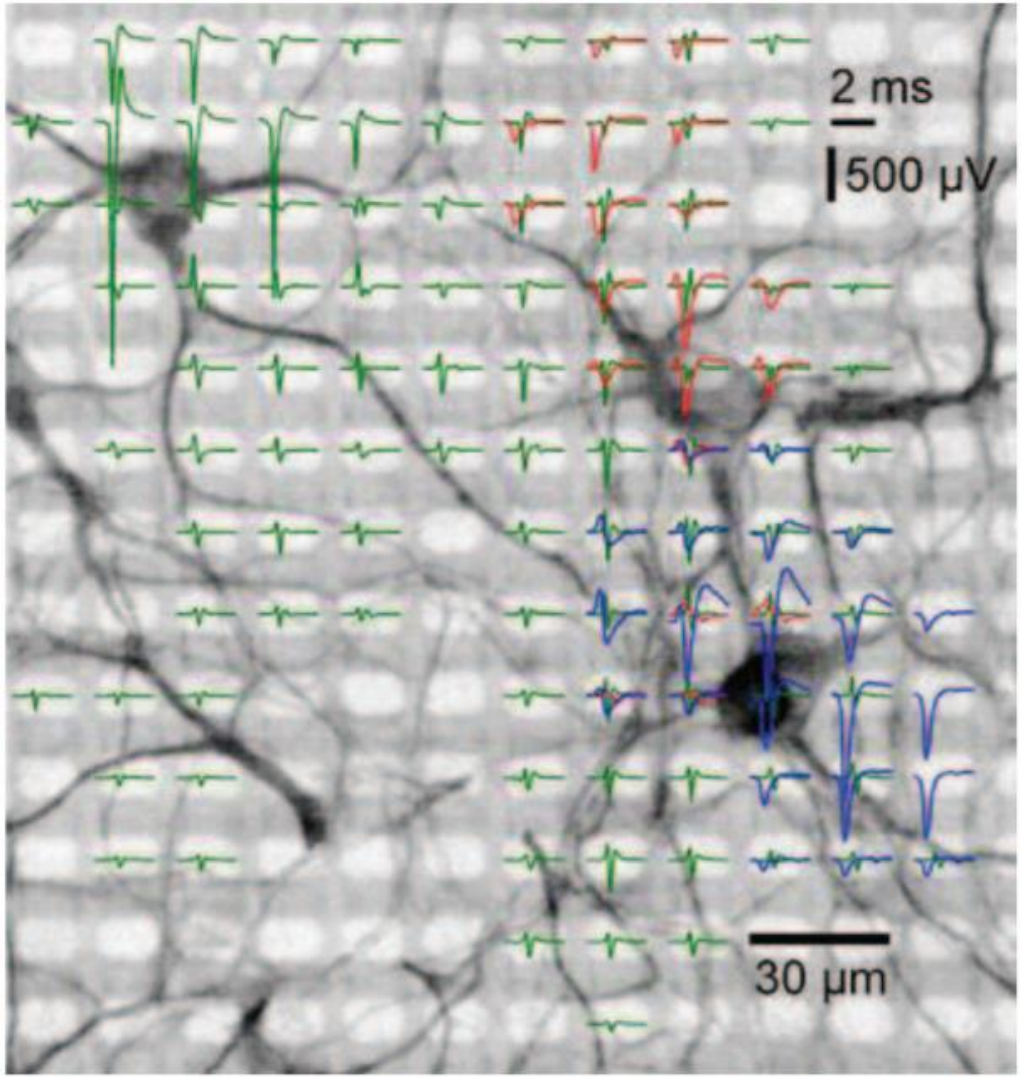

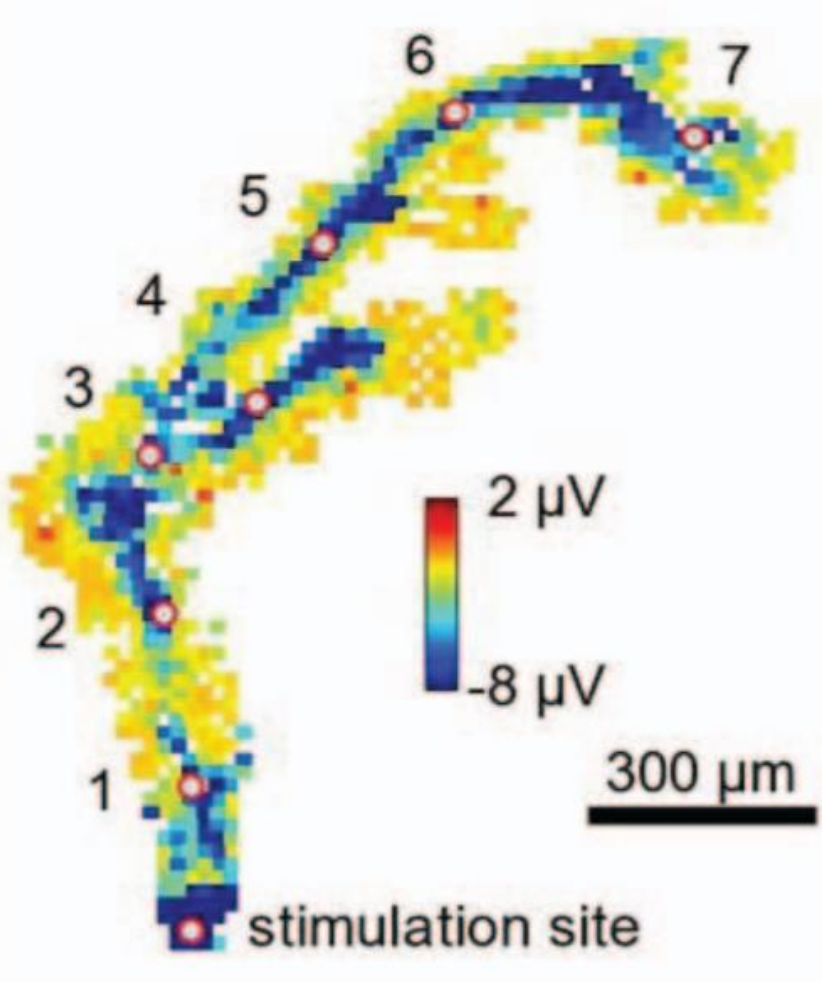

A. Hierlemann, *Tech. Dig. - Int. Electron Devices Meet. IEDM*, 2016

Conclusions

- High sensitivity instruments on a chip are feasible
- They enable new applications thanks to:
  - Improved performance (noise and/or power and/or speed)
  - Multichannel capability
  - Compactness
  - Access to microelectronic technology (some post-processing could be required)
- Co-design of sensor and electronics: no general-purpose chip!